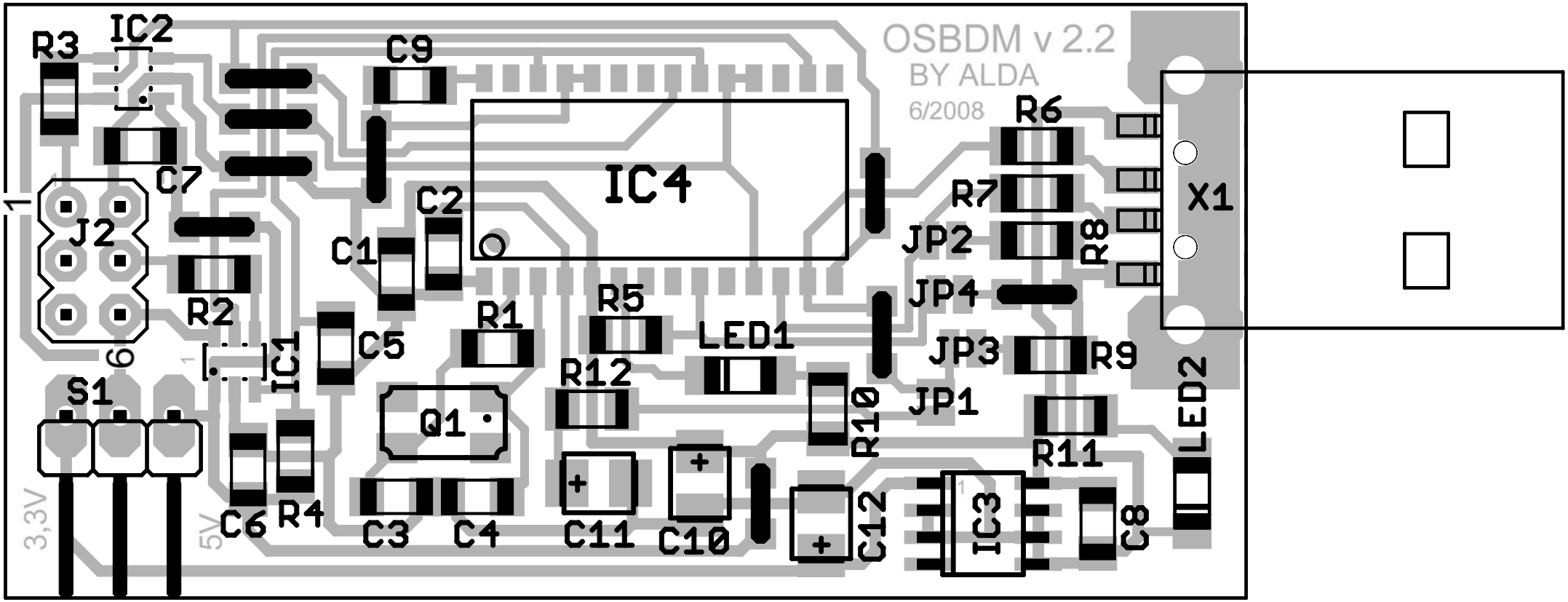
OSBDM v 2.2
BY ALDA
6/2008
R3
IC2
C9
C7
J2
1
6
C2
C1
IC4
R2
IC1
C5
R1
R5
LED1
R12
Q1
S1
3,3V
5V
C6
R4
C3
C4
C11
C10
C12
R10
IC3
R11
C8
LED2
R6
R7
R8
JP2
JP4
JP3
R9
JP1
X1