F862 Series Metallized Polypropylene Film for Heavy Duty Conditions, Class X2, 310 VAC

Electronic Components KEMET CHARGED.

Overview

The F862 Series is constructed of metallized polypropylene film encapsulated with self-extinguishing resin in a box of material recognized to UL 94 V–0. Heavy duty construction.

Applications

Typical applications include connection in series with the mains, capacitive power supplies, and energy meters. High stability grade in severe ambient conditions.

Benefits

- Approvals: ENEC, UL, cUL, CQC
- Rated voltage: 310 VAC 50/60 Hz
- Capacitance range: 0.047 – 4.7 µF
- Lead spacing: 15.0 – 27.5 mm
- Capacitance tolerance: ±20%, ±10%; ±5% on request
- Climatic category: 40/110/56, IEC 60068-1
- Tape and reel in accordance with IEC 60286-2
- RoHS Compliant and lead-free terminations
- Operating temperature range of -40˚C to +110˚C
- 100% screening factory test at 1,900 VDC

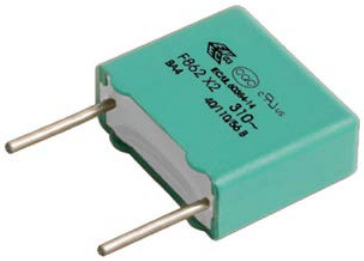

Part Number System

F	862	B	C	104	M	310	C
Capacitor Class	Series	Lead Spacing (mm)	Size Code	Capacitance Code (pF)	Capacitance Tolerance	Voltage (VAC)	Lead and Packaging Code
F = Film	X2, Metallized Polypropylene	B = 15 D = 22.5 F = 27.5	See Dimension Table	First two digits represent significant figures. Third digit specifies number of zeros.	J = ±5% K = ±10% M = ±20%	310	See Ordering Options Table

© KEMET Electronics Corporation • P.O. Box 5928 • Greenville, SC 29606 (864) 963-6300 • www.kemet.com

Ordering Options Table

Lead Spacing Nominal (mm)	Type of Leads and Packaging	Lead Length (mm)	Lead and Packaging Code
15	**Standard Lead and Packaging Options**		
	Bulk (Bag) – Short Leads	4 +2/-0	C
	Bulk (Bag) – Long Leads	17 +0/-1	A
	Tape & Reel (Standard Reel)	H_0= 18.5 +/-0.5	L
	Pizza Pack	4 +2/-0	Z
	Other Lead and Packaging Options		
	Bulk (Bag) – Maximum Length Leads	25 +5/-0	ALR0L
	Ammo Pack	H_0= 18.5 +/-0.5	R
	Tape & Reel (Large Reel)	H_0= 18.5 +/-0.5	P
22.5	**Standard Lead and Packaging Options**		
	Pizza – Long Leads	17 +0/-1	ZLH0A
	Pizza Pack	4 +2/-0	Z
	Other Lead and Packaging Options		
	Tape & Reel (Standard Reel)	H_0= 18.5 +/-0.5	L
	Tape & Reel (Large Reel)	H_0= 18.5 +/-0.5	P
	Ammo Pack	H_0= 18.5 +/-0.5	R
27.5	**Standard Lead and Packaging Options**		
	Pizza – Long Leads	17 +0/-1	ZLH0A
	Pizza Pack	4 +2/-0	Z

Dimensions – Millimeters

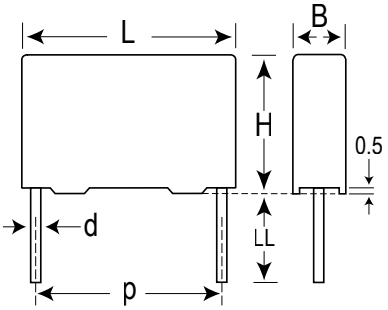

Size Code	p		B		H		L		d	
	Nominal	Tolerance	Nominal	Tolerance	Nominal	Tolerance	Nominal	Tolerance	Nominal	Tolerance
BG	15.0	+/-0.4	6.0	Maximum	12.0	Maximum	18.0	Maximum	0.8	+/-0.05
BK	15.0	+/-0.4	7.5	Maximum	13.5	Maximum	18.0	Maximum	0.8	+/-0.05
BP	15.0	+/-0.4	8.5	Maximum	14.5	Maximum	18.0	Maximum	0.8	+/-0.05
BS	15.0	+/-0.4	10.0	Maximum	16.0	Maximum	18.0	Maximum	0.8	+/-0.05
BY	15.0	+/-0.4	11.0	Maximum	19.0	Maximum	18.0	Maximum	0.8	+/-0.05
BZ	15.0	+/-0.4	12.0	Maximum	20.0	Maximum	18.0	Maximum	0.8	+/-0.05
DB	22.5	+/-0.4	6.0	Maximum	14.5	Maximum	26.0	Maximum	0.8	+/-0.05
DI	22.5	+/-0.4	7.0	Maximum	16.0	Maximum	26.0	Maximum	0.8	+/-0.05
DJ	22.5	+/-0.4	8.5	Maximum	17.0	Maximum	26.0	Maximum	0.8	+/-0.05
DO	22.5	+/-0.4	10.0	Maximum	18.5	Maximum	26.0	Maximum	0.8	+/-0.05
DP	22.5	+/-0.4	11.0	Maximum	20.0	Maximum	26.0	Maximum	0.8	+/-0.05
DU	22.5	+/-0.4	13.0	Maximum	22.0	Maximum	26.0	Maximum	0.8	+/-0.05
FC	27.5	+/-0.4	11.0	Maximum	20.0	Maximum	31.5	Maximum	0.8	+/-0.05
FI	27.5	+/-0.4	13.0	Maximum	25.0	Maximum	31.5	Maximum	0.8	+/-0.05
FN	27.5	+/-0.4	14.0	Maximum	28.0	Maximum	31.5	Maximum	0.8	+/-0.05
FS	27.5	+/-0.4	19.0	Maximum	29.0	Maximum	31.5	Maximum	0.8	+/-0.05
FY	27.5	+/-0.4	22.0	Maximum	37.0	Maximum	31.5	Maximum	0.8	+/-0.05

Note: See Ordering Options Table for lead length (LL) options.

Performance Characteristics

Rated Voltage	310 VAC 50/60 Hz		
Capacitance Range	0.047 – 4.7 µF		
Capacitance Tolerance	±20%, ±10%, ±5% on request		
Temperature Range	-40°C to +110°C		
Climatic Category	40/110/56		
Approvals	ENEC (pending), UL (pending), cUL (pending), CQC (pending)		
Dissipation Factor	Maximum Values at +23°C		
		C ≤ 0.1 µF	C > 0.1 µF
	1 kHz	0.3%	0.2%
Test Voltage Between Terminals	The 100% screening factory test is carried out at 1,900 VDC. The voltage level is selected to meet the requirements in applicable equipment standards. All electrical characteristics are checked after the test. It is not permitted to repeat this test as there is a risk to damage the capacitor. KEMET is not liable in such case for any failures.		
Insulation Resistance	Minimum Values Between Terminals		
	C ≤ 0.33 µF	≥ 30,000 MΩ	
	C > 0.33 µF	≥ 10,000 MΩ • µF	
In DC Applications	Recommended voltage ≤ 630 VDC		

Impedance Graph

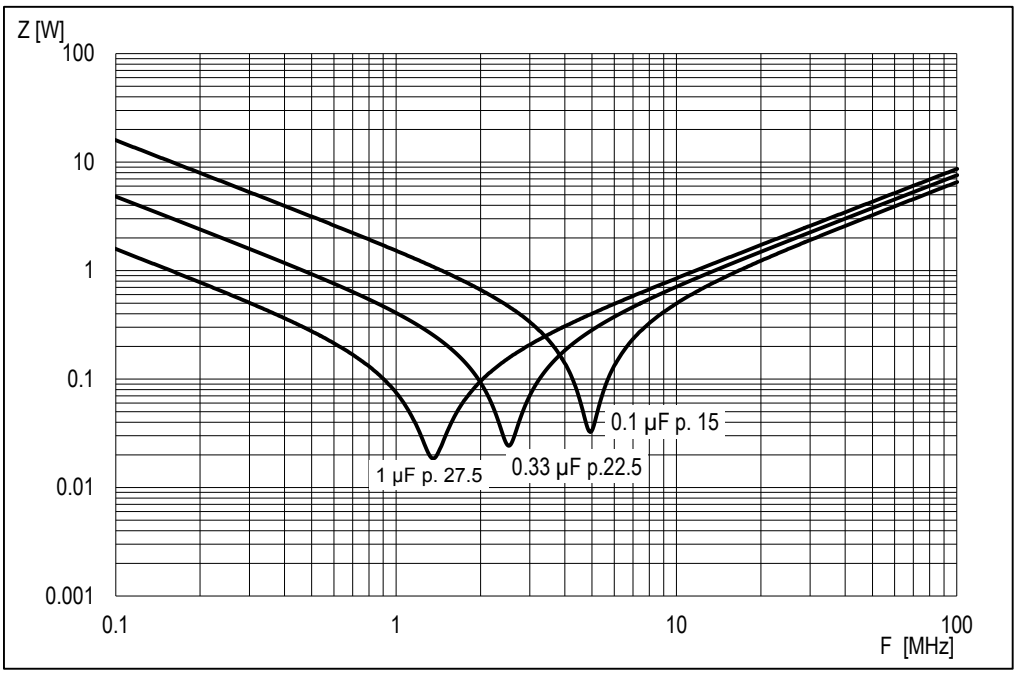

Environmental Test Data

Test	IEC Publication	Procedure
Endurance	IEC 60384–14	1.25 x V_R VAC 50 Hz, once every hour increase to 1,000 VAC for 0.1 second, 1,000 hours at upper rated temperature
Vibration	IEC 60068–2–6 Test Fc	3 directions at 2 hours each 10 – 55 Hz at 0.75 mm or 98 m/s^2
Bump	IEC 60068–2–29 Test Eb	1,000 bumps at 390 m/s^2
Change of Temperature	IEC 60068–2–14 Test Na	Upper and lower rated temperature 5 cycles
Active Flammability	IEC 60384–14	V_R + 20 surge pulses at 2.5 kV (pulse every 5 seconds)
Passive Flammability	IEC 60384–14	IEC 60384–1, IEC 60695–11–5 Needle-flame test
Damp Heat Steady State	IEC 60068–2–78 Test Cab	+40°C and 93% RH, 56 days
THB Test		85°C, 85% RH and 240 VAC, 1,000 hours Capacitance change (ΔC/C): ≤ 10% Dissipation factor change (Δtan δ): ≤ 5 10-3 (at 1 kHz) Insulation resistance Rins or time constant τ = CR Rins: ≥ 50% of initial limit

Approvals

Mark	Specification	File Number
	EN/IEC 60384–14	(pending)
	UL 60384–14 and CAN/CSA–E60384–14	(pending)
	IEC 60384-14	(pending)

Environmental Compliance

All new KEMET EMI capacitors are RoHS Compliant and Halogen Free.

RoHS Compliant

Table 1 – Ratings & Part Number Reference

Capacitance Value (µF)	Size Code	Maximum Dimensions in mm			Lead Spacing (p)	dV/dt (V/µs)	Part Number
		B	H	L			
0.047	BG	6	12	18	15	400	F862BG473(1)310(2)
0.068	BG	6	12	18	15	400	F862BG683(1)310(2)
0.1	BK	7.5	13.5	18	15	400	F862BK104(1)310(2)
0.12	BK	7.5	13.5	18	15	400	F862BK124(1)310(2)
0.15	BK	7.5	13.5	18	15	400	F862BK154(1)310(2)
0.18	BP	8.5	14.5	18	15	400	F862BP184(1)310(2)
0.22	BP	8.5	14.5	18	15	400	F862BP224(1)310(2)
0.33	BS	10	16	18	15	400	F862BS334(1)310(2)
0.39	BS	10	16	18	15	400	F862BS394(1)310(2)
0.47	BY	11	19	18	15	400	F862BY474(1)310(2)
0.56	BZ	12	20	18	15	400	F862BZ564(1)310(2)
0.15	DB	6	14.5	26	22.5	200	F862DB154(1)310(2)
0.22	DI	7	16	26	22.5	200	F862DI224(1)310(2)
0.33	DJ	8.5	17	26	22.5	200	F862DJ334(1)310(2)
0.39	DJ	8.5	17	26	22.5	200	F862DJ394(1)310(2)
0.47	DO	10	18.5	26	22.5	200	F862DO474(1)310(2)
0.56	DO	10	18.5	26	22.5	200	F862DO564(1)310(2)
0.68	DP	11	20	26	22.5	200	F862DP684(1)310(2)
0.82	DP	11	20	26	22.5	200	F862DP824(1)310(2)
1	DU	13	22	26	22.5	200	F862DU105(1)310(2)
1.2	DU	13	22	26	22.5	200	F862DU125(1)310(2)
1	FC	11	20	31.5	27.5	150	F862FC105(1)310(2)
1.5	FI	13	22	31.5	27.5	150	F862FI155(1)310(2)
2.2	FN	14	28	31.5	27.5	150	F862FN225(1)310(2)
3.3	FS	19	29	31.5	27.5	150	F862FS335(1)310(2)
4.7	FY	22	37	31.5	27.5	150	F862FY475(1)310(2)
Capacitance Value (µF)	**Size Code**	**B (mm)**	**H (mm)**	**L (mm)**	**Lead Spacing (p)**	**dV/dt (V/µs)**	**Part Number**

(1) M = ±20%, K = ±10%, J = ± 5% on request.
(2) Insert lead and packaging code. See Ordering Options Table for available options.

Roll Over for Order Info.

Soldering Process

The implementation of the RoHS Directive has required the use of SnAuCu (SAC) or SnCu alloys as primary solder. These alloys require a higher liquidus temperature (217ºC – 221ºC) as compared to SnPb eutectic alloy (183ºC). Due to the higher pre-heat and wave temperatures, the heat stress to components has increased considerably. Polypropylene capacitors are especially sensitive to soldering temperature due to the relatively low melting point of polypropylene material (160ºC – 170ºC). As a result, wave soldering can be destructive, especially to mechanically small polypropylene capacitors with lead spacings of 5 – 10 mm. For more information, please refer to KEMET's Recommended Soldering Profiles or contact a KEMET representative. IEC Publication 61760–1 Edition 2 may also be consulted for general guidelines.

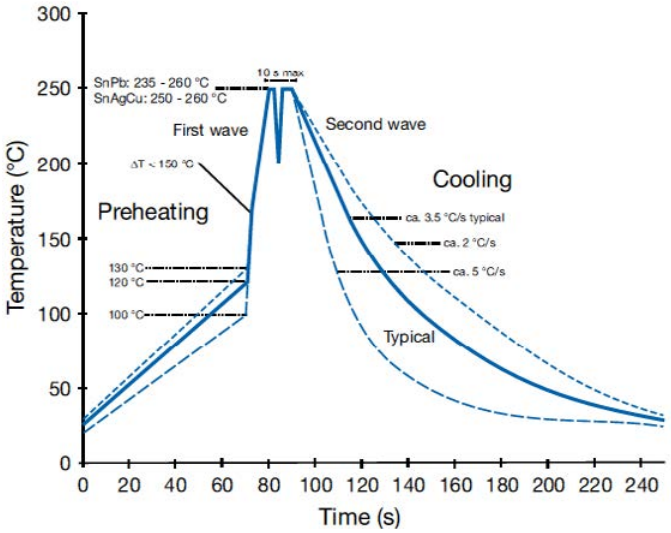

Marking

- KEMET or KEC
- Series
- Capacitance
- Capacitance tolerance
- Rated voltage
- X2
- Approval marks
- Manufacturing date code
- IEC climatic category
- Passive flammability class

Lateral Marking	Top Marking
	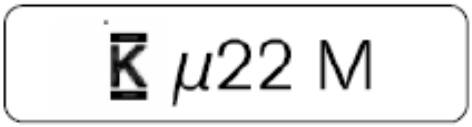

Packaging Quantities

Size Code	Lead Spacing	Thickness (mm)	Height (mm)	Length (mm)	Bulk Short Leads	Bulk Long Leads	Standard Reel ø 355 mm	Large Reel ø 500 mm	Ammo	Pizza
BG	15	6	12	18	1750	1000	500	1000	680	935
BK		7.5	13.5	18	1000	800	350	800	500	748
BP		8.5	14.5	18	1000	650	300	700	440	663
BS		10	16	18	750	550	300	600	380	561
BY		11	19	18	450	400	250	500	340	510
BZ		12	20	18	350	300	220	450	330	459
DB	22.5	6	14.5	26	805	450	300	700	464	660
DI		7	16	26	700	450	250	550	380	564
DJ		8.5	17	26	450	350	250	450	280	468
DO		10	18.5	26	360	350	160	350	235	396
DP		11	20	26	300	200	190	350	217	360
DU		13	22	26	230	150	150	300	200	300
FC	27.5	11.0	20.0	31.5						300
FI		13.0	25.0	31.5						250
FN		14.0	28.0	31.5						230
FS		19.0	29.0	31.5						170
FY		22.0	37.0	31.5						150

Lead Taping & Packaging (IEC 60286–2)

Lead Spacing 5 mm

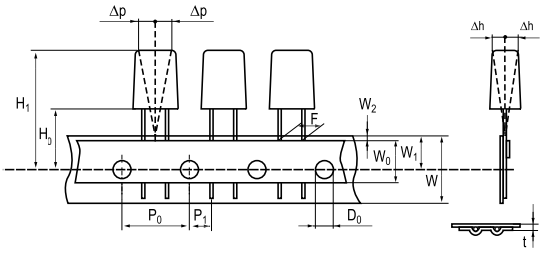

Lead Spacing 7.5 mm

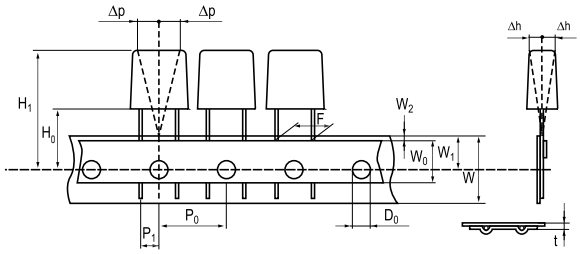

Lead Spacing 10 – 15 mm

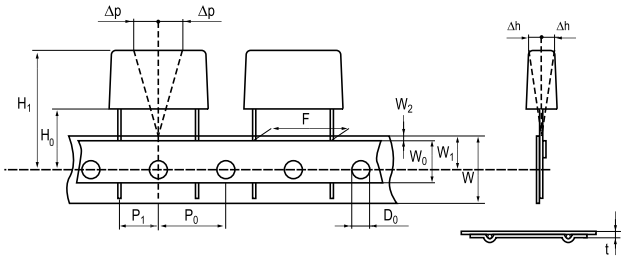

Lead Spacing 22.5 – 27.5 mm

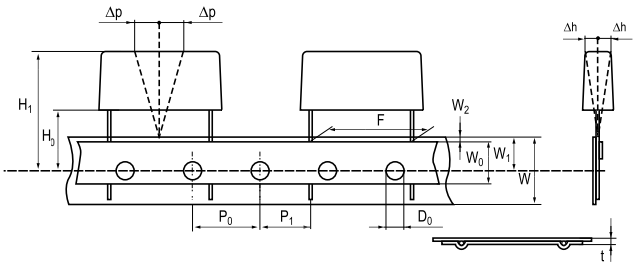

Taping Specification

Dimensions in mm									Standard IEC 60286–2
Lead spacing	+6/-0.1	F	5	7.5	10	15	22.5	27.5	F
Carrier tape width	+1/-0.5	W	18	18	18	18	18	18	$18^{+1/-0.5}$
Hold-down tape width	Minimum	W_0	6	6	9	10	10	10	
Position of sprocket hole	+/-0.5	W_1	9	9	9	9	9	9	$9^{+0.75/-0.5}$
Distance between tapes	Maximum	W_2	3	3	3	3	3	3	3
Sprocket hole diameter	+/-0.2	D_0	4	4	4	4	4	4	4
Feed hole lead spacing	+/-0.2(1)	P_0(3)	12.7	12.7	12.7	12.7	12.7	12.7	12.7
Distance lead – feed hole	+/-0.7	P_1	3.85	3.75	7.7	5.2	7.8	5.3	P^1
Deviation tape – plane	Maximum	Δp	1.3	1.3	1.3	1.3	1.3	1.3	1.3
Lateral deviation	+/-2	Δh	2	2	2	2	2	2	2
Total thickness	+/-0.2	t	0.7	0.7	0.7	0.7	0.9^{MAX}	0.9^{MAX}	0.9^{MAX}
Sprocket hole/cap body	+/-0.5	H_0(2)	$18.5^{+/-0.5}$	$18.5^{+/-0.5}$	$18.5^{+/-0.5}$	$18.5^{+/-0.5}$	$18.5^{+/-0.5}$	$18.5^{+/-0.5}$	$18+^{2/-0}$

(1) Maximum cumulative feed hole error, 1 mm per 20 parts.
(2) 16.5 mm available on request.
(3) 15 mm available on request (F ≥ 10 mm).

Lead Taping & Packaging (IEC 60286–2) cont'd

Ammo Specifications

Series	Dimensions (mm)		
	H	W	T
R4x, R4x+R, R7x, RSB	360	340	59
F5A, F5B, F5D			
F6xx, F8xx			
PHExxx, PMExxx, PMRxxx	330	330	50

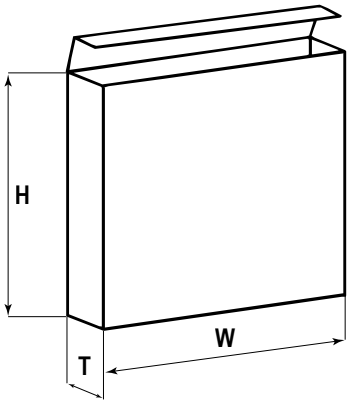

Reel Specifications

Series	Dimensions (mm)		
	D	H	W
R4x, R4x+R, R7x, RSB	355 500	30 25	55 (Max)
F5A, F5B, F5D			
F6xx, F8xx			
PHExxx, PMExxx, PMRxxx	360 500	30	46 (Max)

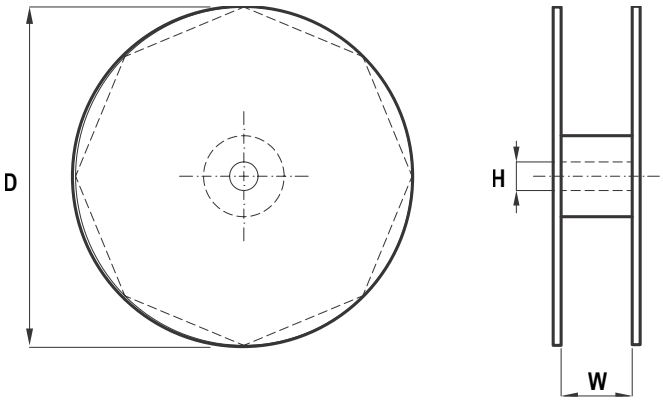

Manufacturing Date Code (IEC–60062)

Y = Year, Z = Month			
Year	Code	Month	Code
2000	M	January	1
2001	N	February	2
2002	P	March	3
2003	R	April	4
2004	S	May	5
2005	T	June	6
2006	U	July	7
2007	V	August	8
2008	W	September	9
2009	X	October	O
2010	A	November	N
2011	B	December	D
2012	C		
2013	D		
2014	E		
2015	F		
2016	H		
2017	J		
2018	K		
2019	L		
2020	M		

KEMET Corporation World Headquarters

2835 KEMET Way
Simpsonville, SC 29681

Mailing Address:
P.O. Box 5928
Greenville, SC 29606

www.kemet.com
Tel: 864-963-6300
Fax: 864-963-6521

Corporate Offices
Fort Lauderdale, FL
Tel: 954-766-2800

North America

Southeast
Lake Mary, FL
Tel: 407-855-8886

Northeast
Wilmington, MA
Tel: 978-658-1663

Central
Novi, MI
Tel: 248-994-1030

West
Milpitas, CA
Tel: 408-433-9950

Mexico
Guadalajara, Jalisco
Tel: 52-33-3123-2141

Europe

Southern Europe
Paris, France
Tel: 33-1-4646-1006

Sasso Marconi, Italy
Tel: 39-051-939111

Central Europe
Landsberg, Germany
Tel: 49-8191-3350800

Kamen, Germany
Tel: 49-2307-438110

Northern Europe
Bishop's Stortford, United Kingdom
Tel: 44-1279-460122

Espoo, Finland
Tel: 358-9-5406-5000

Asia

Northeast Asia
Hong Kong
Tel: 852-2305-1168

Shenzhen, China
Tel: 86-755-2518-1306

Beijing, China
Tel: 86-10-5829-1711

Shanghai, China
Tel: 86-21-6447-0707

Taipei, Taiwan
Tel: 886-2-27528585

Southeast Asia
Singapore
Tel: 65-6586-1900

Penang, Malaysia
Tel: 60-4-6430200

Bangalore, India
Tel: 91-806-53-76817

Note: KEMET reserves the right to modify minor details of internal and external construction at any time in the interest of product improvement. KEMET does not assume any responsibility for infringement that might result from the use of KEMET Capacitors in potential circuit designs. KEMET is a registered trademark of KEMET Electronics Corporation.

Other KEMET Resources

Tools	
Resource	Location
Configure A Part: CapEdge	http://capacitoredge.kemet.com
SPICE & FIT Software	http://www.kemet.com/spice
Search Our FAQs: KnowledgeEdge	http://www.kemet.com/keask
Electrolytic LifeCalculator	http://www.kemet.com:8080/elc

Product Information	
Resource	Location
Products	http://www.kemet.com/products
Technical Resources (Including Soldering Techniques)	http://www.kemet.com/technicalpapers
RoHS Statement	http://www.kemet.com/rohs
Quality Documents	http://www.kemet.com/qualitydocuments

Product Request	
Resource	Location
Sample Request	http://www.kemet.com/sample
Engineering Kit Request	http://www.kemet.com/kits

Contact	
Resource	Location
Website	www.kemet.com
Contact Us	http://www.kemet.com/contact
Investor Relations	http://www.kemet.com/ir
Call Us	1-877-MyKEMET
Twitter	http://twitter.com/kemetcapacitors

Disclaimer

All product specifications, statements, information and data (collectively, the “Information”) in this datasheet are subject to change. The customer is responsible for checking and verifying the extent to which the Information contained in this publication is applicable to an order at the time the order is placed.

All Information given herein is believed to be accurate and reliable, but it is presented without guarantee, warranty, or responsibility of any kind, expressed or implied.

Statements of suitability for certain applications are based on KEMET Electronics Corporation’s (“KEMET”) knowledge of typical operating conditions for such applications, but are not intended to constitute – and KEMET specifically disclaims – any warranty concerning suitability for a specific customer application or use. The Information is intended for use only by customers who have the requisite experience and capability to determine the correct products for their application. Any technical advice inferred from this Information or otherwise provided by KEMET with reference to the use of KEMET’s products is given gratis, and KEMET assumes no obligation or liability for the advice given or results obtained.

Although KEMET designs and manufactures its products to the most stringent quality and safety standards, given the current state of the art, isolated component failures may still occur. Accordingly, customer applications which require a high degree of reliability or safety should employ suitable designs or other safeguards (such as installation of protective circuitry or redundancies) in order to ensure that the failure of an electrical component does not result in a risk of personal injury or property damage.

Although all product–related warnings, cautions and notes must be observed, the customer should not assume that all safety measures are indicted or that other measures may not be required.

Prototype Sample Disclaimer

The Customer acknowledges the following limitations of the prototype samples: (1) prototype samples are manufactured from preliminary designs and manufacturing processes, may not represent final designs, have not been released for commercial use and are not subject to the same quality control procedures applicable to released products; (2) prototype samples are not qualified parts and are provided as-is by KEMET Electronics Corporation, which specifically disclaims any and all warranties and guarantees, explicit or implied, including without limitation the warranties of merchantability and fitness for a particular purpose or use; (3) prototype samples are not intended for commercial use, are provided for engineering evaluation only and are not recommended for use in the Customer's production line; and (4) the Customer assumes the risk of any and all uses that the Customer makes of the prototype samples.

Digitally signed by Jeannette Calvo
DN: c=US, st=FL, l=Fort Lauderdale, o=KEMET Corp., ou=Marketing Communications, cn=Jeannette Calvo, email=jeannettecalvo@kemet.com
Date: 2013.07.29 13:00:16 -04'00'

Preliminary