MeiG_SLM156_
Hardware Design Manual

Controlled Version Number: V1.0

Release Date: 2019/08/01

Add：32/F,Building B,Shenzhen International Innovation Center,
No.1006 Shennan Avenue,Futian District,Shenzhen,China
Tel：+86-755-83218588 Fax：+86-755-83219788
E-mail：ir@meigsmart.com Web：www.meigsmart.com
MeiG Official Wechat QR Code

Important Notice

Copyright Notice

Statement of No Guarantee

MeiG Smart Technology Co., Ltd makes no representations or guarantees, either express or implied, for any contents in this document, and assumes no responsibility for the merchantability and fitness for a particular purpose or any indirect, extraordinary or consequential losses.

Confidentiality Claim

The information contained in this document (including any annexes) is confidential. The recipient understands that the document obtained by him is confidential and shall not be used for any purpose other than the stated purpose, and he shall not disclose this document to any third party.

Disclaimer

The company assumes no responsibility for property damage or personal injury caused by customers' improper operation. Customers are requested to develop corresponding products according to the technical specifications and reference designs in the manual. Before the disclaimer, the company has the right to change the contents of this manual according to the needs of technological development, and the version is subject to change without further notice.

Revision History

Version	Date	Reason for Revision
V1.0	2019-08-01	Establish for the first version

Contents

Table Index

Figure Index

1 Introduction

This document defines SLM156 and describes its air interface and hardware interface which are connected with your application.

The document can help you quickly understand SLM156 interface specifications, electrical and mechanical details and other related product information. Associated with application notes and user guide, you can apply SLM156 in wireless applications easily.

1.1 Safety Instructions

By complying with the following safety principles, you can ensure personal safety and protect the products and working environment from potential damage:

	Driving safety first! When you drive, do not use handheld mobile terminal device unless it has a hands-free function. Please stop the car before calling!
	Please turn off the mobile terminal device before boarding. The wireless function of mobile terminal shall not be turned on in the aircraft to prevent interference with the aircraft communication system. Ignoring this reminder may affect flying safety or even violate the law.
	In hospitals or health care facilities, pay attention to whether there are restrictions on the use of mobile terminal device. RF interference will cause medical equipment to be abnormal, so mobile terminal device may need to be turned off.
	Mobile terminal device cannot always be effectively connected, for example, if the mobile device has no expense or the SIM is invalid. When you encounter the above situations in an emergency, please make an emergency call, meanwhile, ensure that your device is turned on and in an area with sufficient signal strength.
	Your mobile terminal device will receive and transmit radio frequency signals when it is turned on. There will be radio frequency interference when it is close to TV, radio, computer or other electronic equipment.
	Please keep mobile device away from inflammable gases. Please turn off the mobile terminal device when you are near a fueling station, oil depot, chemical plant or explosion site. There will be potential safety hazards when operating electronic equipment in any place with potential explosion hazard.

1.2 Purpose of the Document

This document describes basic functions and main features of SLM156 wireless module, as well as hardware interface and its application, features of structure and electronics, and power index, in order to guide you to embed SLM156 in various application terminals.

1.3 List of Contents

The document includes:

- Chapter 1 introduces safety information, purpose of the document and revising records;
- Chapter 2 describes basic functions and main features of SLM156 wireless module;
- Chapter 3 describes functions, features, and applications of each hardware interface of SLM156;
- Chapter 4 describes related features of GNSS;
- Chapter 5 introduces related information and notes of antenna interface;
- Chapter 6 describes electronic features of SLM156;
- Chapter 7 describes structure features and notes of SLM156;
- Chapter 8 describes storage and production notes of SLM156;
- Chapter 9 Appendix A: Reference documents and abbreviations.

2 Product Overview

2.1 Basic Description

SLM156 is a multi - mode IOT wireless communication module, which supports half-duplex LTE and does not support diversity receiving function. SLM156 can provide data connection under LTE-FDD, GPRS and EGPRS networks, and it also supports GNSS and voice function.

The following table shows the supported bands of SLM156 and GNSS function:

Table 1 Supported bands of SLM156 and GNSS function

Module	LTE band	GSM band	Diversity receiving	GNSS
SLM156	Cat M1 &NB1: NB-IoT： (Class 5)： B1/B2/B3/B4/B5/B8/B12/ B13/B18/B19/B20/B25/B26/B28/B66/B71/B85 Cat M(Class5)： B1/B2/B3/B4/B5/B8/B12/ B13/B14/B18/B19/B20/B25/B26/B27/B28/B66/B85	EGPRS: GSM850/EGSM900/DCS1800/PCS1900	Non-supportive	GPS, GLONASS, BeiDou/Compass, Galileo, QZSS

Using advanced highly integrated design, SLM156 integrates RF and baseband on a piece of PCB which has functions of wireless reception and transmission, baseband signal processing. It uses single side layout and the size is: 21×20×2.3 mm. The module can be applied in security system, wearable services, wireless POS machine, industrial PDA, intelligent meter reading, wireless remote control, vehicle devices, etc .

2.2 Main Performance

The following table describes the performance of the SLM156 in detail.

Table 2 List of main features of the module

Parameter	Description
Power supply	● VBAT power supply range: 3.3V~4.2V ● Typical supply voltage: 3.8V

Transmit power	● Class 5 (20dBm±2dB) for LTE FDD bands ● Class 4 (33dBm±2dB) for GSM850 ● Class 4 (33dBm±2dB) for GSM900 ● Class 1 (30dBm±2dB) for DCS1800 ● Class 1 (30dBm±2dB) for PCS1900 ● Class E2 (27dBm±3dB) for GSM850 8-PSK ● Class E2 (27dBm±3dB) for GSM900 8-PSK ● Class E2 (26dBm±3dB) for DCS1800 8-PSK ● Class E2 (26dBm±3dB) for PCS1900 8-PSK
LTE features	● Support LTE Cat.M1 and LTE Cat.NB2 ● LTE Cat.M1: support 1.4MHz broadband ● LTE Cat.NB2: support 200KHz broadband ● Download supports SISO ● CAT M1: upload rate 588Kbps, download rate 1119Kbps ● CAT NB2: download rate 127Kbps, upload rate 158.5Kbps
GSM features	GPRS: ● support GPRS multi-slot grade 33(default as 33) ● coding scheme: CS-1/CS-2/CS-3/CS-4 ● GPRS: maximum download rate 107kbpsm, maximum upload rate 85.6kbps EDGE: ● Support EDGE multi-slot grade 33(default as 33) ● Support GMSK and 8-PSK ● Download coding scheme: CS 1-4 and MCS 1-9 ● Upload coding scheme: CS 1-4 and MCS 1-9 ● EDGE: maximum download rate 296kbps, maximum upload rate 236.8kbps
Network protocol features	● Support TCP/UDP/PPP/FTP/HTTP/SMTP /PING /QMI protocol ● Support PAP(Password Authentication Protocol) and CHAP (Challenge Handshake Authentication Protocol)
SMS	● Text and PDU mode ● Point to point MO and MT ● Short message cell broadcast ● Short message storage: default stored in module
USIM card interface	● Support USIM/SIM card: 1.8V
USB interface	● Compatible USB2.0 features (only support slave mode), maximum data transfer rate reaches 480Mbps ● Used for AT command, data transmission, GNSS NMEA output, software debugging and software upgrading ● USB driver: support Windows XP, Windows Vista, Windows7, Windows 8/8.1,Windows10，Windows CE 5.0/6.0/7.0, Linux 2.6 or higher versions, Android 2.3/ 4.x/5.x/6.0
Serial Port	Main serial port: ● Used for AT command and data transfer ● Default baud rate as 115200bps

	● Support RTS and CTS hardware flow control Debug serial port: ● Used for module debugging and log output ● Baud rate as 115200bps
AT command	● Confirm to 3GPP TS 27.007, 27.005 and added new MEIG AT commands
Network indication	● NET_STATUS pin is used to indicate network status
Antenna interface	● Include main antenna(ANT_MAIN) and GNSS antenna (ANT_GNSS)
Physical features	● Dimension: 21×20×2.3mm ● Weight: about 3g
Temperature range	● Normal operating temperature:-30℃～+75℃ ● Limited operating temperature: -40℃～+85℃ ● Storage temperature:--45℃～+90℃
Software upgrade	● USB interface
RoHS	● All hardware components fully comply with the EU RoHS standard
humidity	● 5%~95%
ESD	● VBAT,GND: air discharge±10KV, contact discharge±5KV ● Antenna interface: air discharge±8KV, contact discharge±4KV ● Other interface: air discharge±2KV, contact dischage±1KV
Consumption	● PSM current: TBD ● Idle mode: TBD ● Data mode:TBD
Encapsulation	● 68Pin LCC
Functional Interface	● Power supply interface ● USB2.0 High-Speed interface ● UART interface ● USIM/SIM card interface (support 1.8V) ● Indicator interface ● Sleep mode control interface ● Flight mode control interface ● ADC interface ● Power_On_Off interface ● I2C interface ● PCM interface ● SPI interface ● GPIOs ● USB_Boot interface

2.3 Evaluation Board

In order to help you develop applications with SLM156, MEIG supplies an evaluation board, USB data cable, antenna and other peripherals to control or test the module.

See MEIG_U_EVB User Guide for specific usage of evaluation board.

3 Application Interface

3.1 General Description

SLM156 uses LCC interface, with a total of 68Pin and provides the following functional interfaces:

- Power supply interface
- USB2.0 High-Speed interface
- UART interface
- USIM/SIM card interface (support 1.8V)
- Hardware reset interface
- Indicator interface
- Sleep mode control interface
- Flight mode control interface
- ADC interface
- Power_On_Off interface
- I2C interface
- PCM interface
- SPI interface
- GPIOs
- USB_Boot interface

3.2 Pin Definition of LCC Module

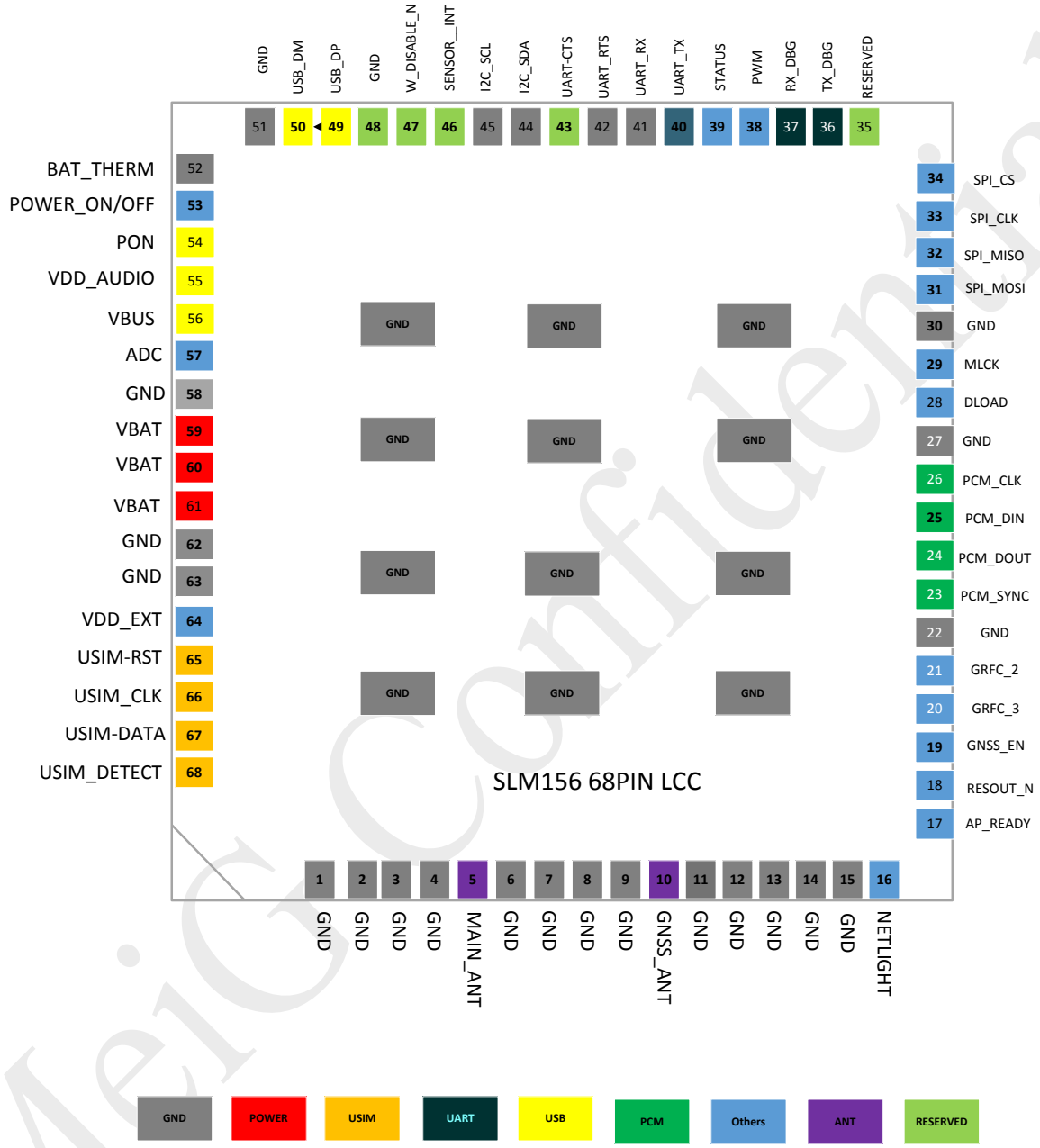

Figure 1 Pin Assignment

3.3 Pin Description

The following table shows the SLM156's pin definition.

Table 3 IO parameters definition

Type	Description
IO	Input and output
DI	Digital input
DO	Digital output
PI	Power input
PO	Power output
AI	Analog input
AO	Analog output
OD	Open drain

Table 4 Pin description

Power					
Pin name		**I/O**	**Description**	**DC features**	**Note**
VBAT	59.60.61	PI	Power supply for module baseband	Vmax=4.2V Vmin=3.3V Vnorm=3.8V	
VDD_EXT	64	PO	Output 1.8V	Vnorm=1.8V Iomax=80mA	Provide external pull-up to GPIO, if unused, keep it open.
VDD_AUDIO	55	PO	Output 1.8V	Vnorm=1.8V Iomax=80mA	Provide power for SIM
GND	1,2,3,4,6,7,8,9,11,12,13,14,15,22,27,30,48,51,58,62,63	-	Ground	-	-

Power on/ off

Pin name	Pin number	I/O	Description	DC features	Note
POWER_ON/OFF	53	DI	Power on / standby	VIHmax=2.1V VIHmin=1.3V VILmax=0.5V	
PON	54	DI	Power on / standby	VIHmax=2.1V VIHmin=1.3V VILmax=0.5V	
Status indication					
Pin name	**Pin number**	**I/O**	**Description**	**DC features**	**Note**
STATUS	39	O D	Indicate the operating state of the module	SINK current should be less than 10mA	OD output, external pull-up is needed, if unused, keep it open
NETLIGHT	16	O D	Indicate network state of the module	SINK current should be less than 10mA	OD output, external pull-up is needed, if unused, keep it open
USB interface					
Pin name	**Pin number**	**I/O**	**Description**	**DC features**	**Note**
VBUS	56	IO	USB detection	Vnorm=5.0V	
USB_DM	50	IO	USB differential data positive signal	Compliant with USB2.0 standard	Require differential impedance of 90Ω
USB_DP	49	IO	USB differential data positive signal	Compliant with USB2.0 standard	Require differential impedance of 90Ω
USIM card interface					
Pin name	**Pin number**	**I/O**	**Description**	**DC features**	**Note**
USIM_DATA	67	IO	USIM card data bus	1.8V USIM: VILmax=0.6V VIHmin=1.2V VOLmax=0.45V VOHmin=1.35V	-

USIM_CLK	66	DO	USIM card clock line	1.8V USIM: VOLmax=0.45V VOHmin=1.35V	-
USIM_RST	65	DO	USIM card reset line	1.8V USIM: VOLmax=0.45V VOHmin=1.35V	-
USIM_DETECT	68	DI	USIM card detection	VILmin=-0.3V VILmax=0.6V VIHmin=1.2V VIHmax=2.0V	1.8V power domain, don't use NC
Main serial port					
Pin name	**Pin number**	**I/O**	**Description**	**DC features**	**Note**
UART_RX	41	DI	Moduel receives data	VILmin=-0.3V VILmax=0.6V VIHmin=1.2V VIHmax=2.0V	1.8V power domain, if unused, keep it open
UART_TX	40	DO	Module sends data	VOLmax=0.45V VOHmin=1.35V	1.8V power domain, if unused, keep it open
UART_CTS	43	DO	Module clears sending data	VOLmax=0.45V VOHmin=1.35V	1.8V power domain, if unused, keep it open
UART_RTS	42	DI	DTE asks sending data	VILmin=-0.3V VILmax=0.6V VIHmin=1.2V VIHmax=2.0V	1.8V power domain, if unused, keep it open
UART interface					
Pin name	**Pin number**	**I/O**	**Description**	**DC features**	**Note**
TX _DBG	36	DO	Module sends data	VOLmax=0.45V VOHmin=1.35V	1.8V power domain, if unused, keep it open
RX_ DBG	37	DI	Module receives data	VILmin=-0.3V VILmax=0.6V VIHmin=1.2V VIHmax=2.0V	1.8V power domain, if unused, keep it open
PCM interface					

PCM_DOUT	24	DO	PCM data output	VOLmax=0.45V VOHmin=1.35V	1.8V power domain, if unused, keep it open
PCM_DIN	25	DI	PCM data input	VILmin=-0.3V VILmax=0.6V VIHmin=1.2V VIHmax=2.0V	1.8V power domain, if unused, keep it open
PCM_CLK	26	DO	PCM clock output	VOLmax=0.45V VOHmin=1.35V	1.8V power domain, if unused, keep it open
PCM_SYNC	23	DO	PCM synchronous frame signal	VOLmax=0.45V VOHmin=1.35V	1.8V power domain, if unused, keep it open
SPI interface					
SPI_MISO	32	DI	SPI MISO	VOLmax=0.45V VOHmin=1.35V	1.8V power domain, if unused, keep it open
SPI_MOSI	31	DO	SPI MOSI	VOLmax=0.45V VOHmin=1.35V	1.8V power domain, if unused, keep it open
SPI_CS	34	DI	SPI CS	VOLmax=0.45V VOHmin=1.35V	1.8V power domain, if unused, keep it open
SPI_CLK	33	DO	SPI clock output	VOLmax=0.45V VOHmin=1.35V	1.8V power domain, if unused, keep it open
ADC interface					
Pin name	**Pin number**	**I/O**	**Description**	**DC features**	**Note**
ADC	57	AI	General purpose analog to digital converter.	Voltage range: 0.3V~1.8V	If unused, keep it open
I2C interface					
Pin name	**Pin number**	**I/O**	**Description**	**DC features**	**Note**
I2C_SCL	45	OD	I2C clock		External pull-up to 1.8V is

					required, if unused, keep it open
I2C_SDA	44	OD	I2C data		External pull-up to 1.8V is required, if unused, keep it open
RF interface					
MAIN _ANT	5	IO	Main antenna	50 ohm impedance	
GNSS_ ANT	10	AI	GNSS antenna	50 ohm impedance	If unused, keep it open
Other interfaces					
Pin name	Pin number	I/O	Descriptin	DC features	Note
GNSS_EN	19	DI	Sleep mode controls input	VILmin=-0.3V VILmax=0.6V VIHmin=1.2V VIHmax=2.0V	External 1.8V pull-up is required, In high level, the module is waken up; in low level, the module enters into sleep mode, if unused, keep it open
AP_READY	17	DI	application processor sleep mode detection	VOLmax=0.45V VOHmin=1.35V	External pull-up to 1.8V is required, if unused, keep it open
RESOUT_N	18	DO	Reset status indication signal	VOLmax=0.45V VOHmin=1.35V	1.8V power domain, if unused, keep it open
GRFC_3	20	IO	Control RF switch	VIHmax=2.1V VIHmin=1.3V VILmax=0.5V VOLmax=0.45V VOHmin=1.35V	1.8V power domain, if unused, keep it open
GRFC_2	21	IO	Control RF switch	VIHmax=2.1V VIHmin=1.3V VILmax=0.5V VOLmax=0.45V	1.8V power domain, if unused, keep it open

				VOHmin=1.35V	
DLOAD	28	DI	Force dload pin	VIHmax=2.1V VIHmin=1.3V VILmax=0.5V	Connect to 1.8v and start up to enter the mandatory loading mode
MCLK	29	DO	MCLK output	VOLmax=0.45V VOHmin=1.35V	
W_DISABLE_N	47	DO	Flight mode control	VILmin=-0.3V VILmax=0.6V VIHmin=1.2V VIHmax=2.0V	External pull-up to 1.8V is required, in low level, the module enters into flight mode, if unused, keep it open
BAT_THERM	52	DI	Battery temperature detection	VIHmax=2.1V VIHmin=1.3V VILmax=0.5V	1.8V power domain, if unused, keep it open
SENSOR_INT	46	DI	Sensor interrupt input	VIHmax=2.1V VIHmin=1.3V VILmax=0.5V	1.8V power domain, if unused, keep it open
PWM	38	DO	Pulse width modulation	VOLmax=0.45V VOHmin=1.35V	1.8V power domain, if unused, keep it open
RESERVED	35	IO	RESERVED PIN	VIHmax=2.1V VIHmin=1.3V VILmax=0.5V VOLmax=0.45V VOHmin=1.35V	1.8V power domain, if unused, keep it open

3.4 Operating Mode

Table 5 Overview of operating mode

Mode	Description	
Normal mode	IDLE	Software is in normal operation. If the module has registered online, it can receive and send data.
	Talk/Data	Network connection is in normal operation. Under this mode, the module power consumption depends on network setting and data transmission rate.

Extent idle mode discontinuous receiving (e-I-DRX)	Power consumption of e-I-DRX is higher than PSM; but compared with PSM, it raise the accessibility of download to a large extent. Module and core network negotiate e-I-DRX related parameter through attach and TAU process. Please refer to chapter 3.5.3 for detail information.
Minimum functionality mode	VBAT keep supplying power, use AT+CFUN=0 to let module enter in minimum functionality mode, at the moment, the receiving and sending of RF is close. Use AT+CFUN=1to restart receive and send registering network and let it be in normal functionality mode.
Flight mode	W_DISABLE_N pin can set the module to enter into flight mode. In this mode RF function will be invalid.
Power down mode	VBAT shuts down in the low power supply mode. In this mode, PMU stops supplying power to baseband and RF; software is inactive and the serial interface is not accessible.
Power saving mode (PSM)	Modules can lower self power consumption through entering PSM. PSM is similar to power off, but the module is still registered online. After waken up by PSM, module doesn't need reattach and rebuild PDN connection. Please refer to Chapter 3.5.2 for detail information.

3.5 Power Saving

3.5.1 Flight Mode

When the module enters into flight mode, the RF function will not work, and all AT commands correlative with RF function will be inaccessible. You can use the following ways to let the module enter into flight mode:

Hardware controls flight mode:

W_DISABLE_N pin is defaulted as pull-up, drive W_DISABLE_N to low level, then the module enters into flight mode.

Software controls flight mode:

This mode can be set through sending AT+CFUN=<fun> command. <fun> parameter can be chosen from 0,1 and 4.

- AT+CFUN=0 : minimum functionality mode, close RF and (U)SIM card;
- AT+CFUN=1 : full-function mode (default);
- AT+CFUN=4: close RF function (flight mode).

3.5.2 Power Saving Mode (PSM)

SLM156 can lower its power consumption through entering PSM mode. PSM is similar to power off, but the module is still registered online. After PSM is waken up, the module does not need reattach and rebuild PDN connection. Thus, when the module enters into PSM, it cannot respond to user's request immediately.

When the module uses PSM, it will ask an activity period during each attach and TAU process. If network supports PSM and accepts the use of PSM, network confirms use of PSM through allocating activity time for modules. If the module wants to change activity time, such as change of conditions, the module will ask needed time during TAU process.

If network supports PSM, it can send AT+CPSMS=1 command to realize PSM function.

The module can be waken up from PSM state in the following ways:

- Pulling PWRKEY pin to low level can wake up the module;
- When the waitable timer boils, the module is waken up automatically.

3.5.3 Extent Idle Mode Discontinuous Receiving

SLM156 can use e-I-DRX to lower its power consumption. The power consumption of e-I-DRX is higher than PSM; but compared with PSM, it improve the accessibility of download communication to a large extent. Module and core network negotiate e-I-DRX related parameter through attach and TAU process. Please refer to chapter 3.5.3 for detail information.

If the module decides to ask e-I-DRX, the module will carry ask-for-use e-I-DRX parameter in attach request or TAU information, including DRX -related parameters.

Core network decides whether accept the request of activating e-I-DRX.

- If core network accept the request, the core network can provide e-I-DRE parameter, which is different from the request, in the meantime, it will provide the length of paging time window for the module; then the module should use e-I-DRX in accordance with the received length of e-I-DRX and paging time window.
- If the network rejects the module's request or doesn't support e-I-DRX, the received information of attach/TAU doesn't appear e-I-DRX parameter, the module uses normal DRX system.

If network supports e-I-DRX, this function can be realized through AT+CEDRXS=1 command.

3.6 Power Supply

3.6.1 Power Supply Pins

This section describes interfaces correlative with power supply and switch. Related interfaces are as follows:

Table 6 Related power supply interfaces

Pin name	Pin number	Description	Min	Typical	Max	Unit
VBAT	59,60,61	Module baseband power	3.3	3.8	4.2	V
VDD_EXT	64	Output 1.8V	-	1.8	-	V
VDD_AUDIO	55	Output 1.8V		1.8		
GND	1,2,3,4,6,7,8,9, 11,12,13,14,15, 22,27,30,48,51, 58,62,63	Ground	-	0	-	V

3.6.2 Decrease Voltage Drop

The power supply range of SLM156 is from 3.3V to 4.2V. In order to reduce voltage drop, it is suggested set a low ESR 100uF filter capacitor and three ceramic capacitors (100nF, 33pF and 10pF) near VBAT pin. When external power connects the module, The width of lines should not be less than 2mm.

In addition, in order to guarantee the stability of power, it is recommended to add zener diode with 5.1V and power over 0.5W onto the power. The reference circuit for power supply is as follows:

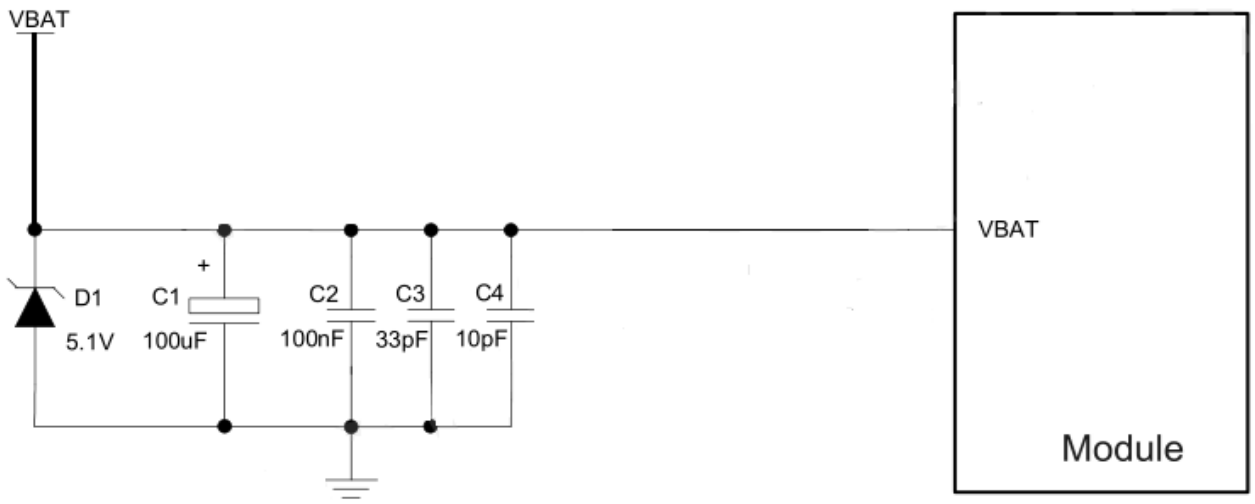

Figure 2 Reference Circuit for Power Supply

3.6.3 VDD_EXT Voltage Output

If SLM156 module turns on normally, there is a voltage output of 1.8V, current load 80mA in PIN64. You can use the output voltage as external power supply, for example level reference, and judge if the module is turned on by reading pin level status.

3.7 Turn on and off

SLM156 supports power-on button. You can query the output high level of VDD_EXT pin to see if the module is turned on.

3.7.1 Turn on Module Using the POWER_ON/OFF

Table 7 Description of POWER_ON/OFF pin

Pin name	Pin number	Function	DC features	Description
POWER_ON/OFF	53	Turn on/ off the module	VIHmax=2.1V VIHmin=1.3V VILmax=0.5V	

When SLM156 is in power down mode, it can be turned on to normal mode by driving the POWER_ON/OFF pin to a low level for at least 100ms. It is suggested that you use an open set driver circuit to control POWER_ON/OFF pin.

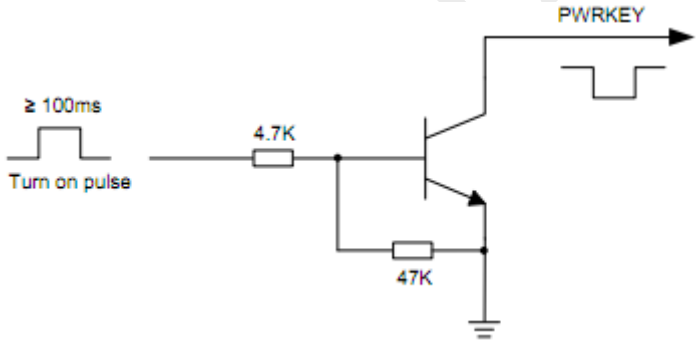

Figure 3 Turn on the Module Using Driving Circuit

The other way to control the POWER_ON/OFF is using a button directly. A TVS component is indispensable to be placed nearby the button for ESD protection. A reference circuit is shown in the following figure:

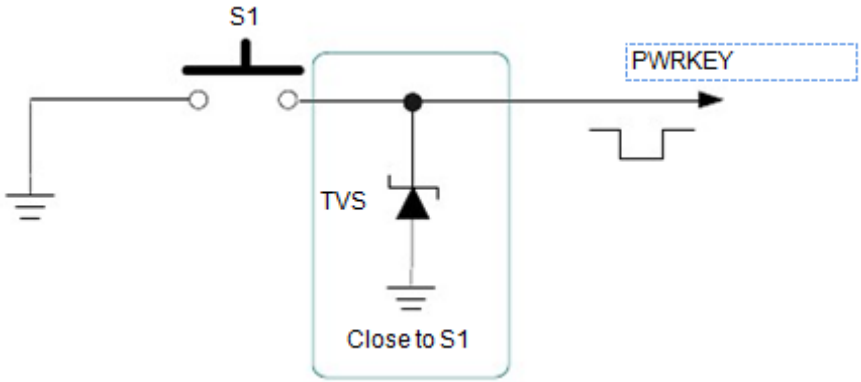

Figure 4 Turn on the Module Using Keystroke

Timing of turning on the module is illustrated as follows:

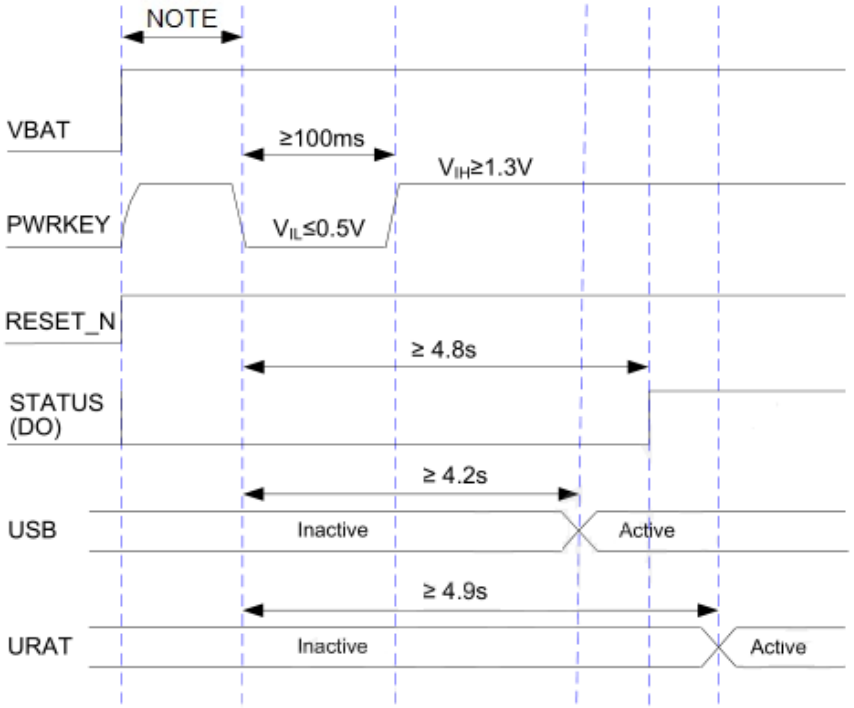

Figure 5 Timing of Turning on Module

Note:

Tnote > 30ms.

3.7.2 Turn off Module Using the POWER_ON/OFF Pin

In power on mode, POWER_ON/OFF pin is released after pulling down for at least 650ms, and the module will execute power-down procedure after POWER_ON/OFF is released. The power-down time is illustrated in the following figure:

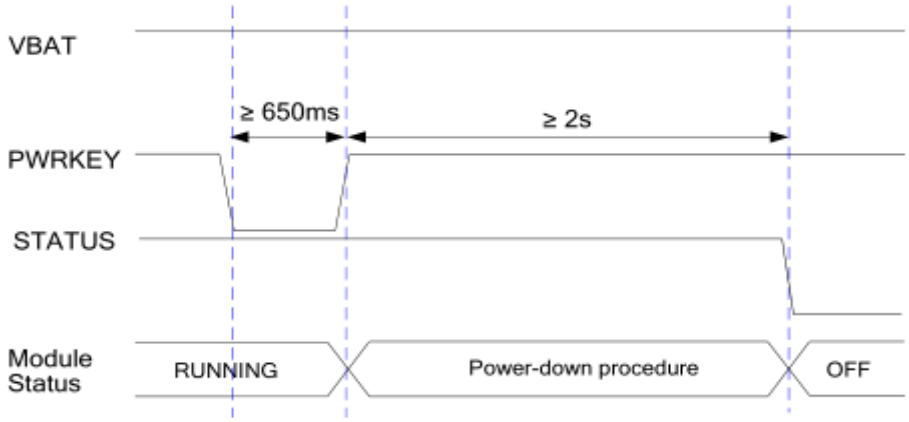

Figure 6 Timing of Turning off Module

3.8 Reset Fuction

AT command can be used to reset SLM156.

3.8.1 AT Command Reset

Enter AT+RESET command in SLM156 UART or USB AT interface to reset and restart SLM156.

3.9 USIM/SIM Interface

USIM card interface meets ETSI and IMT-2000 SIM interface requirements. 1.8V USIM cards are supported by SLM156.

3.9.1 USIM/SIM Card Interface Pin Description

USIM/SIM card interface signals of SLM156 are as follows.

Table 8 USIM/SIM card interface

Pin name	Pin number	I/O	Description	Note
USIM_DATA	67	IO	USIM card data signal	
USIM_CLK	66	DO	USIM card clock signal	
USIM_RST	65	DO	USIM card reset signal	
VDD_AUDIO	66	PI	USIM POWER	1.8V
USIM_PRESENT	68	DI	USIM card plugging detection	Require to pull up to1.8V

SLM156 module supports USIM card hot pkugging function through USIM_PRESENT pin and high level detection, the hot plugging function is defaulted as closed. In the figure, when a card is inserted in SLM card slot, USIM_PRESENT pin is in high level; when there is no card, USIM_PRESENCE is in low level.

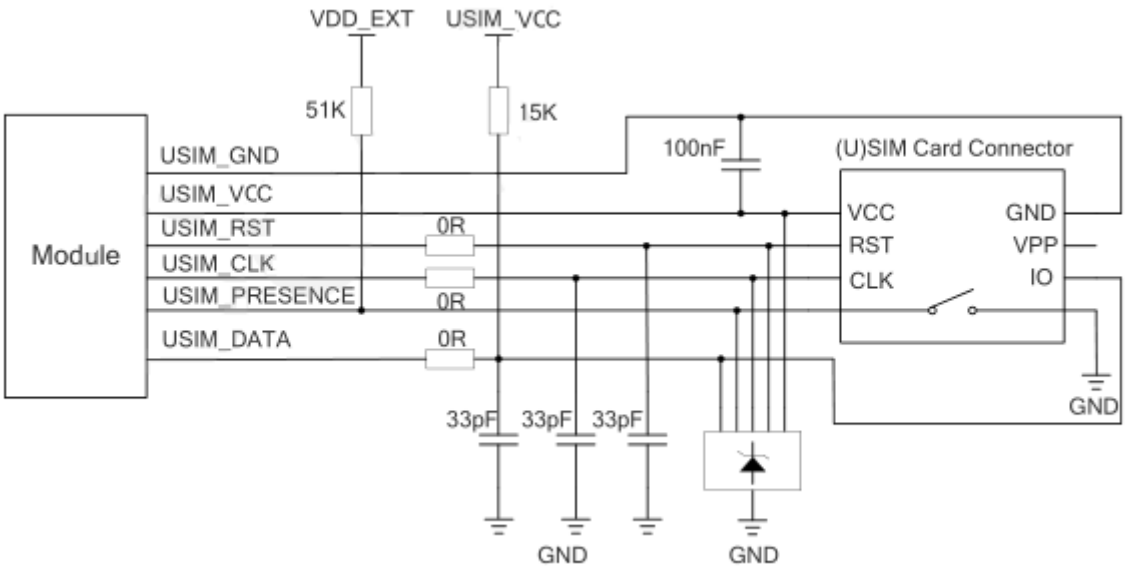

Figure 7 Reference Circuit for 8-pin USIM/SIM Connector

If USIM card detection function is not required, keep USIM_PRESENT pin pulling up to 1.8V. The following figure is a reference circuit for 6-pin USIM/SIM connector:

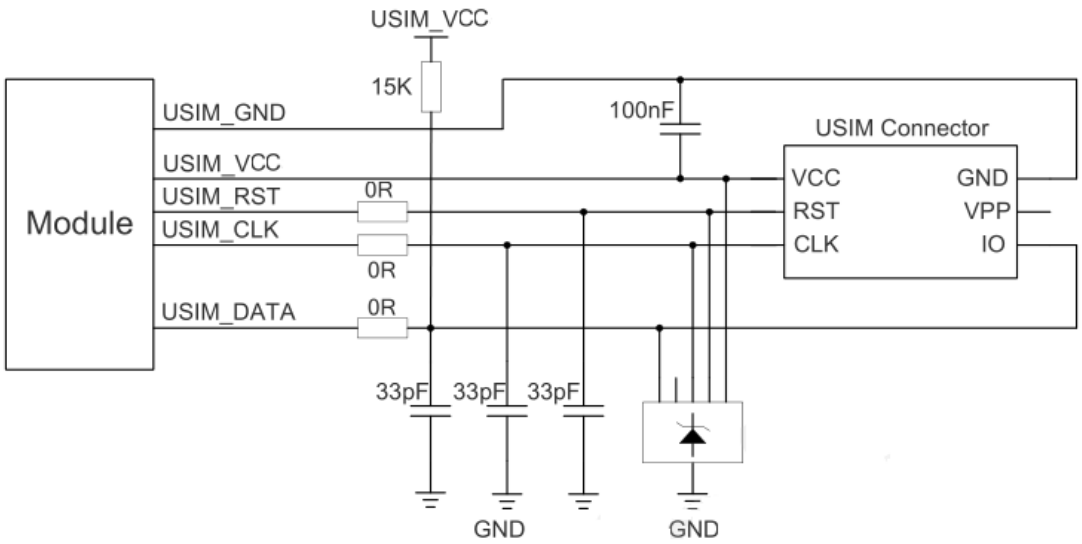

Figure 8 Reference Circuit for 6-pin USIM/SIM Connector

In order to enhance the reliability and availability of the USIM card in your application, please follow the criteria below in the USIM circuit design:

- USIM_DATA requires a pull-up resistor of 15kΩ to USIM_VCC; the pull-up resistor helps to increase SIM card's anti-interference ability. When USIM card trace is too long or it is close to the interference source, it is recommended that you add a pull-up resistor near the card;
- In order to suppress stray EMI and enhance ESD protection, it is recommended to connect a resistance of 0Ω on USIM_DATA, USIM_CLK and USIM_RESET line;
- In order to improve the antistatic ability and offer good ESD protection, it is recommended to add TVS whose parasitic capacitance should be less than 15pF on USIM_VCC, USIM_DATA, USIM_CLK and USIM_RESET line;
- In order to filter GSM900 interference, add a parallel 33pF resistance on USIM_VCC, USIM_DATA, USIM_CLK and USIM_RESET line;
- Keep layout of USIM card as close as possible to the module. Assure the length of signal wiring is less than 200mm;
- Keep USIM card signal away from RF and VBAT power line;
- To avoid cross-talk between USIM_CLK and USIM_DATA, keep them away from each other and shield them with surrounded ground;
- Complete hot plugging of USIM/SIM card by using the DETECT pin of hot plug card slot and the 42pin of the module. The default setting does not support hot plug function. Contact us if you need more information about the function.

Note:

Hot plug of SIM Connectors is not supported. Hot plug to USIM and SIM card can cause damages to USIM /SIM card or SLM156 USIM /SIM card interfaces.

3.10 USB Interface

SLM156 provides a USB interface which complies with USB 2.0 specification and supports high-speed (480Mbps) and full-speed (12Mbps) modes. The USB interface is used for AT command communication, data transmission, software debugging and version upgrade.

3.10.1 USB Pin Description

SLM156 module provides a USB2.0 High-Speed interface.k

Table 9 USB interface description

Name	Pin name	I/O	Description	Note
USB_DM	50	IO	USB differential data signal-	Require 90Ω differential impedance
USB_DP	49	IO	USB differential data signal+	Require 90Ω differential impedance
USB_VBUS	56	PI	USB power supply, used for USB detection	Typical value 5.0V

3.10.2 USB Reference Circuit

USB interface application reference circuit of SLM156 is shown in the following figure.

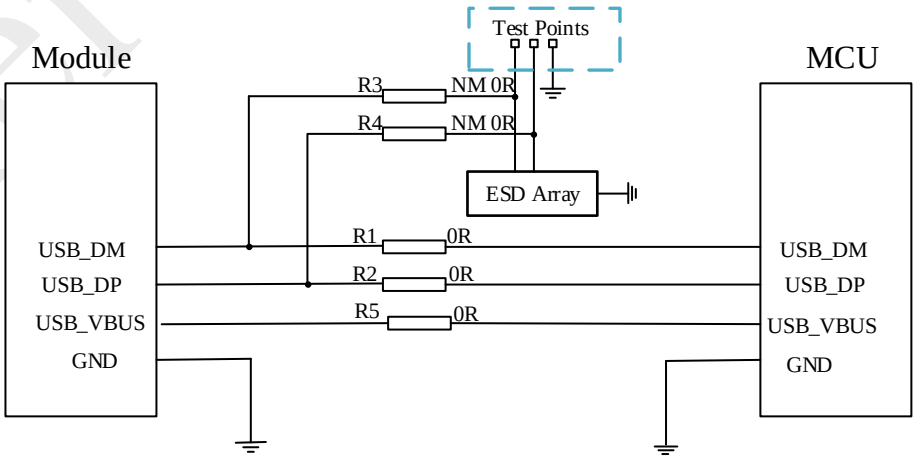

Figure 9 USB Reference Circuit

In order to meet the requirements of USB data bus signal's completeness, the impedance R1/R2/R3/R4 must be set near the module and the resistances should be set closely. The branching-off connecting testing point should be as short as possible.

In order to guarantee the USB performance, the principles below should be followed in circuit design:

- Module USB_VBUS is for detecting the plugging in and out of USB, not for supplying power for the module;
- In order to reduce the signal interference of USB high speed data transmission, connect R1 and R2 between USB_DM and USB_DP interface circuit to improve the data transmission rate. It is recommended that you use R1 and R2 of 0Ω;
- In order to improve the antistatic performance of USB interface, it is recommended to add ESD protection components on USB_DP and USB_DM interface circuit. It is recommended that you use ESD components with junction capacitance less than 1pF;
- In order to ensure that the USB is reliable, consider more about the protection of USB when designing, such as the protection of USB on Layout requires impedance control of 90Ω for USB_DP, USB_DM, tracing strictly according to differential requirements, and keeping away from the interference signal as far as possible;
- Do not trace the USB line in the crystal oscillator, oscillator, magnetic device and RF signal; it is recommended to trace inner differential line and up and down around the package.\

3.10.3 USB Driver

- SLM156 supports various operation systems, such as PC operation systems: Windows 2000, Windows XP, Windows 10,Windows Vista32/64, Windows 7/8, embedded operation system: Windows CE5.0/6.0, Windows Mobile5.0/6.0, which requires private USB driver support;
- For different operating systems and different VID and PID, USB driver provides different driver files. Contact supporting staff if you have specific requirements;
- SLM156 also supports embedded operating systems of Linux and Android. System brings its own driver usbserial.ko as Linux kernel system. There is no specialized USB diver for SLM156, usbserial.ko with loading system aims to realize USB loading SLM156. It is important to find the driver file usbserial.ko and load PID and VID in system.

3.11 UART Interface

SLM156 provides two interfaces: main interface and debugging interface. Main features of these two interfaces are shown as follows:

- Main interface supports 9600, 19200, 38400, 57600, 115200, 230400, 460800, 921600bpsbaud rate, the default baud rate is115200bps, which is used for data transmission and AT command.
- Debugging interface supports 115200bps baud rate, which is used for Linux control and log print.

3.11.1 UART Pin Description

Table 10 UART1 pin description

Pin name	Pin number	I/O	Description	Note
UART_RX	41	DI	Module receives data	1.8V power domain
UART_TX	40	DO	Module sends data	1.8V power domain
UART_CTS	43	DO	Module clears sending	If unused, keep it open
UART_RTS	42	DI	DTE asks to send data	If unused, keep it open

Table 11 Pin description of debugging interface

Pin name	Pin number	I/O	Description	Note
DBG_RX	37	DI	Module receives data	1.8V power domain
DBG_TX	36	DO	Module sends data	1.8V power domain

Table 12 Logical level of interface

Parameter	Min	Max	Unit
VIL	-0.3	0.6	V
VIH	1.2	2.0	V
VOL	0	0.45	V
VOH	1.35	1.8	V

SLM156 provides 1.8V serial port. If your application serial port is 3.3V, you need to add level converter. It is recommended that you use TXB0104PWR from TI Company. Reference design is shown as follows:

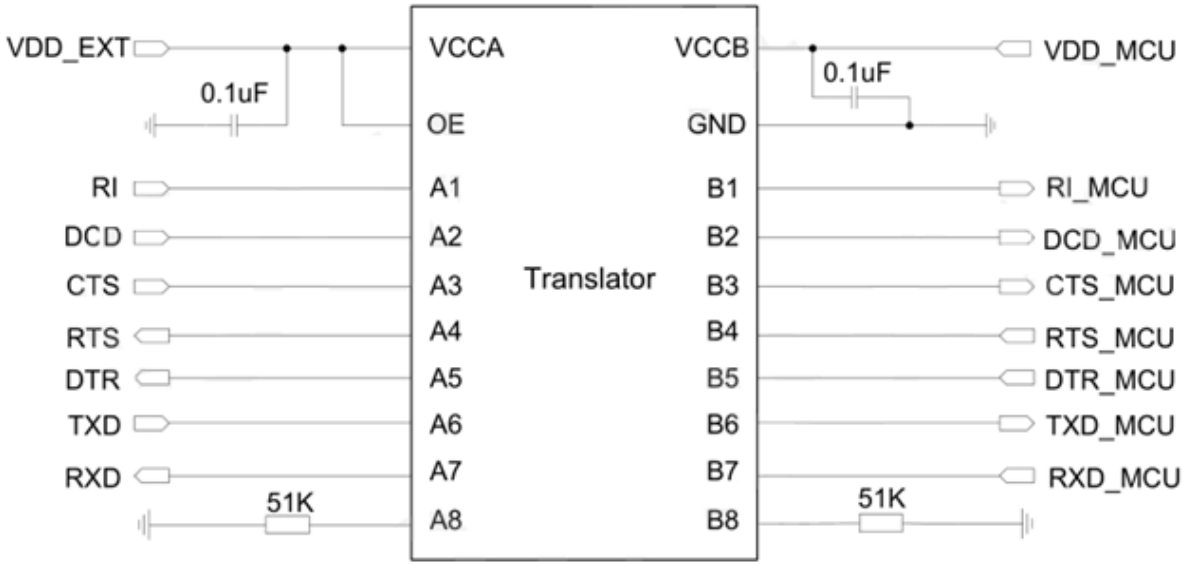

Figure 10 Reference Circuit of Level Conversion Chip

3.12 Network Status Indication

The network indication pins can be used to drive a network status indicator LED. SLM156 provides two pins: The following tables describe pin STATUS and NET_STATUS .The following two tables show the definition and logic level changes in different network status.

Table 13 Pin description of network indication

Pin name	Pin number	I/O	Description	Note
NETLIGHT	16	DO	Indicate the network status of the module	1.8V power domain

Table 14 Activity status of NET_STATUS

Mode	State	Description
NETLIGHT	Flicker slowly (200ms OFF/1800ms ON)	Network search
	Flicker quickly(1800ms OFF/200ms ON)	Idle

	Flicker quickly (125ms On/125ms Off)	Data transmission mode
	High level	Voice calling

Users can design schematic diagram using sink current, the reference circuit is as follows:

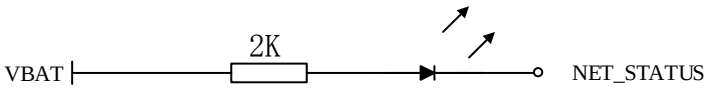

Figure 11 Reference Circuit of Network Indication

GPIO controlled can also be used, the other reference circuit is shown as follows:

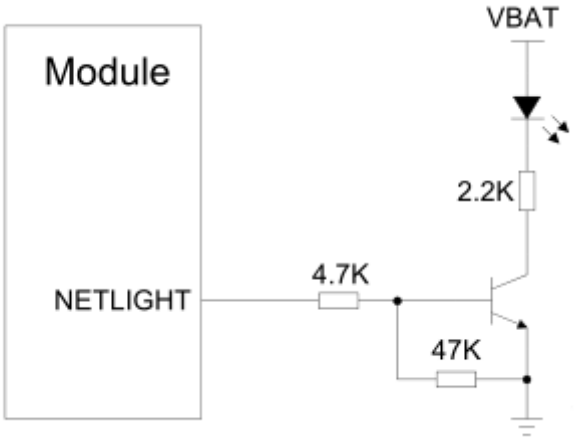

Figure 12 Reference Circuit of Network Indication

3.13 Status Indicaiton

STATUS pin is used to indicate the working state of the module, when the module is turned on normally, STATUS outputs low level.

Table 15 STATUS pin definition

Pin name	Pin number	Description	I/O	Note
STATUS	39	Indicate working status of the module	DO	1.8V power domain

Reference circuit is the same as that of NET_STATUS, which has two kinds, and users can choose from one of them:

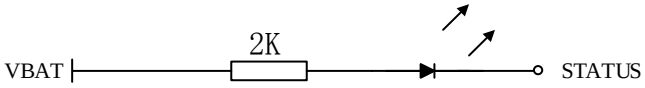

Figure 13 Reference Circuit of STATUS

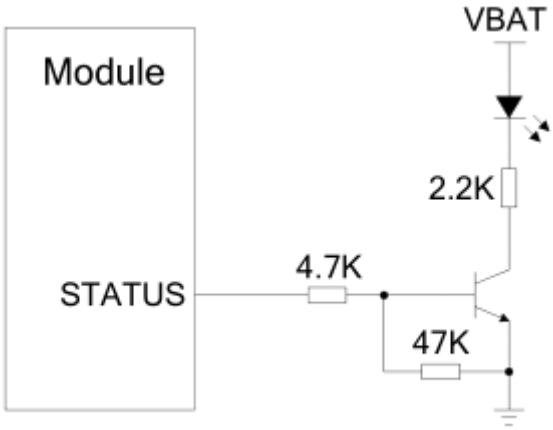

Figure 14 Reference Circuit of STATUS

3.14 ADC Function

SLM156 provides one analogy-to-digital conventers. Using AT+QADC=0 can read the voltage value of ADC.

Table 16 ADC pin description

Pin name	Pin number	Description	Voltage range	Resolution
ADC	57	Analogy-to –digital converter	0.3 ~VBAT_BB	12bits

3.15 DLOAD Interface

SLM156 supports DLOAD function. Users can pull up DLOAD to VDD_EXT (1.8V) before turning on the module, when the module is turned on, the module enters into mandatory download mode. Under this mode, module can update software through USB interface.

Table 17 DLOAD pin description

Pin name	Pin number	I/O	Description	Voltage range
DLOAD	28	DI	Mandatory download mode control, valid in high level	1.8V power domain

Reference circuit is as follows:

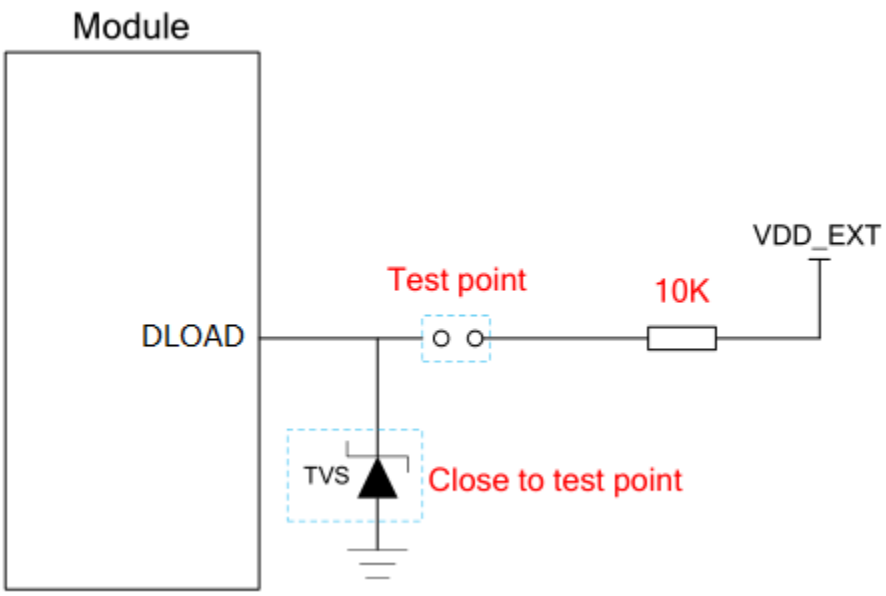

Figure 15 Reference Circuit of DLOAD Interface

3.16 PCM Interface

SLM156 provides one PCM interface, supporting the following two modes:

- Short frame mode: module can be main device and slave device;
- Long frame mode: module can only be main device

- Under short frame mode, data do sampling in PCM_CLK falling edge and send in rising edge, PCM_SYNC falling edge represents high effective bits. PCM_CLK supports 128, 256, 512, 1024 and 2048kHz voice coding.
- Under long frame mode, data do sampling in PCM_CLK falling edge and send in rising edge, PCM_SYNC falling edge represents high effective bits. PCM_CLK only supports 128 kHz PCM_CLK and 8kHz, 50% duty ratio PCM_SYNC.
- SLM156 supports 8-bit A-law, u-law and 16 bits linear coding mode. The following two figures are short frame mode timing (PCM_SYNC=8 kHz, PCM_CLK= 2048kHz) and long frame mode timing (PCM_SYNC=8 kHz, PCM_CLK= 128kHz).

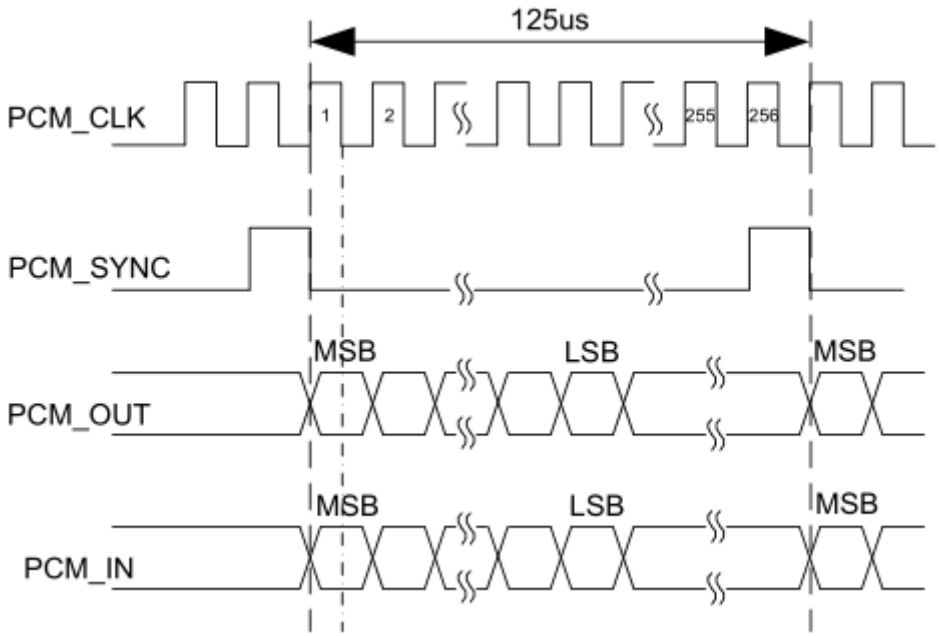

Figure 16 Short Frame Mode Timing

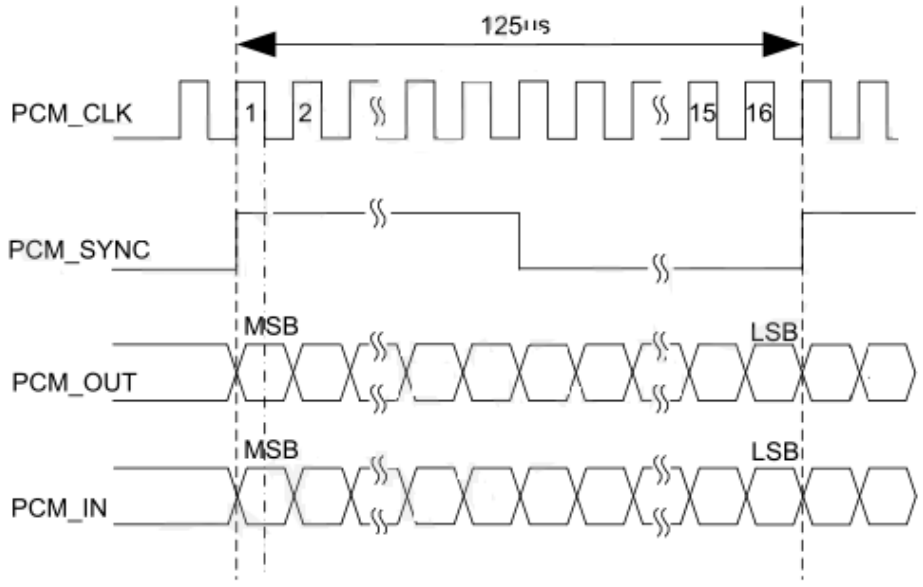

Figure 17 Long Frame Mode Timing

Table 18 Pin description of PCM interface

Pin name	Pin number	I/O	Description	Note
PCM_CLK	26	IO	PCM clock	1.8V power domain
PCM_DOUT	24	DO	PCM data output	1.8V power domain
PCM_DIN	25	DI	PCM data input	1.8V power domain
PCM_SYNC	23	IO	PCM data simultaneous signal	1.8V power domain
I2C_SCL	45	OD	I2C clock	External pull-up of 1.8V is required
I2C_SDA	44	OD	I2C data	External pull-up of 1.8V is required

AT command can be used to set clock and mode, and the default setting is short frame mode, PCM_SYNC=8kHz, PCM_CLK=2048kHz.

The following figure shows the reference circuit of PCM interface with external Codec chip:

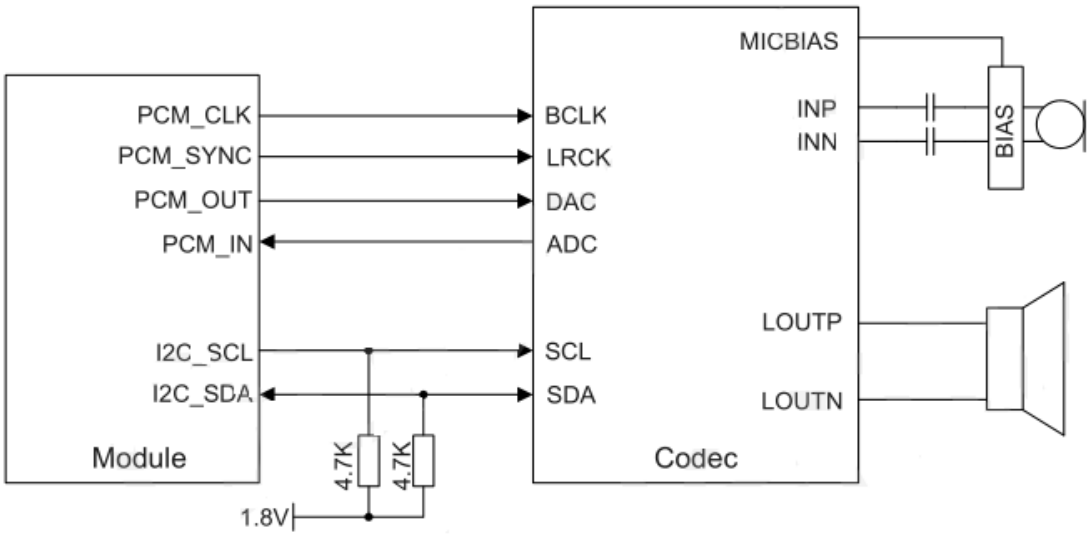

Figure 18 Reference Circuit of PCM

4 GNSS Receiver

4.1 General Description

SLM156 includes an integrated embedded GNSS solution that supports Gen8C-Lite (GPS, GLONASS, BeiDou).

SLM156 module supports standard NMEA-0183 protocol, and outputs NMEA sentences with 1Hz via USB interface by default.

4.2 GNSS Performance

The following table shows SLM150 GNSS performance.

Table 19 GNSS performance

Parameter	Description	Performance index
Positioning accuracy (open)	Horizon	TBD
	Altitude	TBD
Speed accuracy	Speed	TBD
First positioning time TTFF	Cold start	TBD
	Warm start	TBD
	Hot start	TBD
Sensitivity	Capturing	TBD
	Tracking	TBD
Serial output baud rate	300bit/s~230400bit/s	
GPS receiving	12 channel, GPS L1(1575.42MHz), C/A code	
Data update rate	1Hz	
Data format	NMEA 0183	

4.3 Layout Guideline

You need to follow the layout guidelines in the below when designing:

- Maximize the distance between the GNSS antenna, the main antenna and the diversity antenna;
- Noisy digital circuits such as the USIM card, USB interface, Camera module, Display connector and SD card should be kept away from the antenna;
- Use ground vias around the GNSS trace and sensitive analog signal traces to provide isolation and protection;
- Keep 50ohm characteristics impedance of the ANT_GNSS trace;
- See Chapter 5 for GNSS reference design and antenna consideration.

5 Antenna Interface

Table 20 Pin definition of RF antenna

Pin name	Pin number	Description	I/O	Note
MAIN_ ANT	5	Mian antenna	IO	50Ω impedance
GNSS_ ANT	10	GNSS antenna	AI	50Ω impedance

5.1 Antenna Interface

SLM156 provides two antenna pins, which are MAIN_ ANT, GNSS_ ANT.

It is recommended that you use a 50Ω impedance antenna that matches the RF connector of the module.

It is suggested that you chose RF adapter carefully on application end. It is necessary to select the smallest possible loss of the RF adapter, and the recommended RF adapters are as follows:

- TD-LTE<1.5dB
- FDD LTE<1.5dB

5.1.1 Working Band

Table 21 Working band of the module

Network mode	Band	Receive	Transmit
GSM	GSM850	869~894 MHz	824~849 MHz
	EGSM900	925~960	880~915 MHz
	DCS1800	1805~1880	1710~1785 MHz
	PCS1900	1930~1990	1850~1910 MHz
Cat M1 &NB1	Band1	2110~2170MHz	1920~1980MHz

Band2	1930~1990MHz	1850~1910MHz
Band3	1805~1880MHz	1710~1785MHz
Band4	2110~2155MHz	1710~1755MHz
Band5	869~894MHz	824~849MHz
Band8	926~960MHz	880~915MHz
Band12	729-746 MHz	699-716 MHz
Band13	746-756 MHz	777-787 MHz
Band14	758-768 MHz	788-798 MHz
Band18	860~874.9MHz	815~829.9MHz
Band19	875~889.9MHz	830~844.9MHz
Band20	791-821 MHz	832-862 MHz
Band25	1930-1995 MHz	1850-1915 MHz
Band26	859~894MHz	814~849MHz
Band27	852-869 MHz	807-824 MHz
Band28	758-803 MHz	703-748 MHz
Band66	2110-2200 MHz	1710-1780 MHz
Band71	617-652 MHz	663-698 MHz
Band85	TBD	TBD

5.2 RF Reference Circuit

RF_ANT antenna connection reference circuit is shown as follows. In order to gain better RF performance, you need to reserve π-type matching circuit without mounting capacitor.

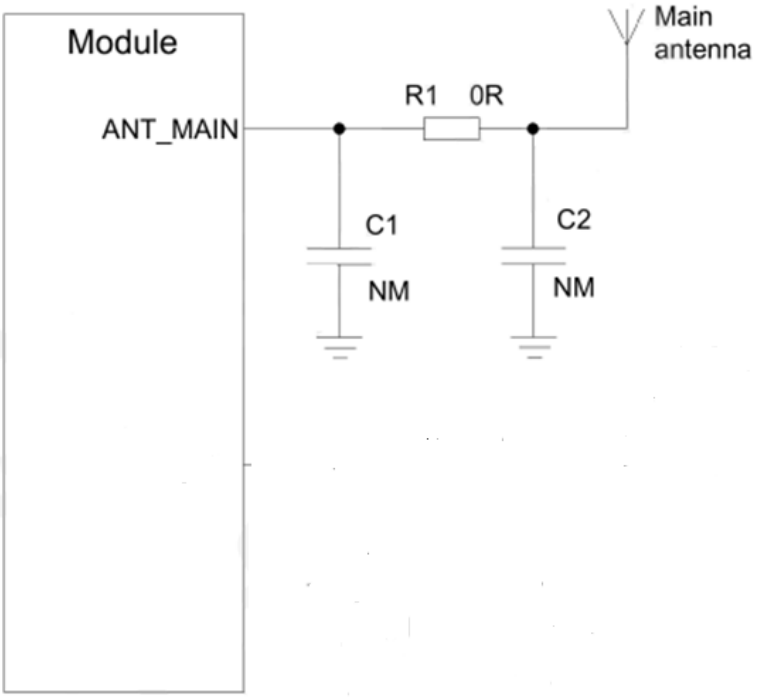

Figure 19 Reference Circuit

GNSS antenna reference design is shown as below:

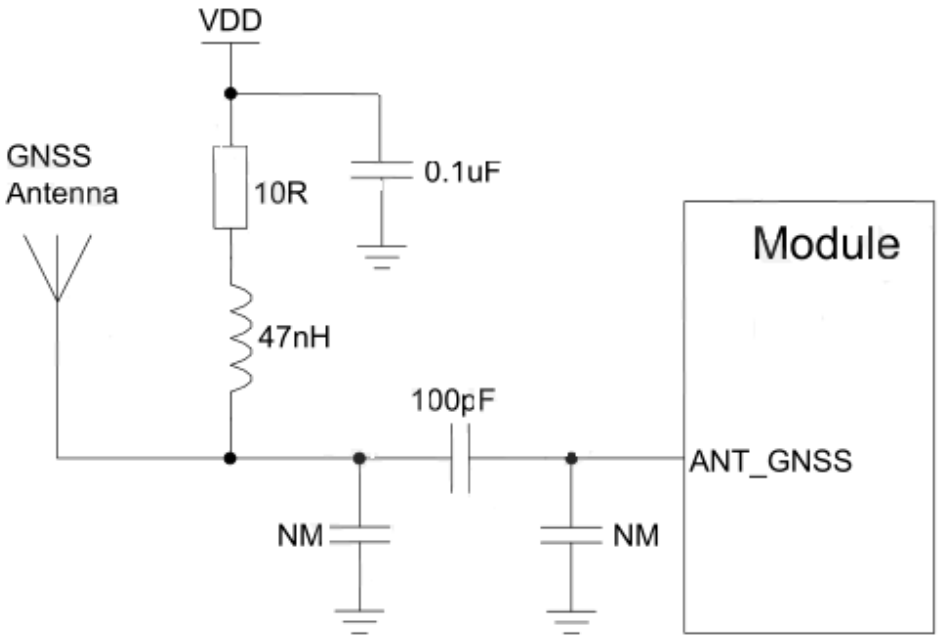

Figure 20 GNSS Antenna Reference Circuit

Note:

1. You can choose external LDO power supply according to active antenna;
2. You can choose passive antenna design so you do not need to design VDD circuit.

5.3 Antenna Installation

5.3.1 Antenna Requirements

The requirements of main antenna and GNSS antenna are shown as follows:

Table 22 Antenna Requirements

Type	Requirement
GNSS antenna	RF range:1561-1615MHz
	Polarization: RHCP or linear
	VSWR: < 2 (Typ.)
	Passive antenna gain: > 0 dBi
	Active antenna noise coefficient: < 1.5 dB
	Active antenna gain:< -2 dBi
	Active antenna embedded LNA gain:20 dB (typical value)
	Active antenna total gain:> 18 dBi (typical vaule)
LTE/GSM antenna	VSWR:≤2
	Gain (dBi): 1
	Maximum input power(W): 50
	Input impedance(ohm): 50
	Polarization type: vertical
	Cable insertion loss: < 1dB (LTE B5/8/18/19/26 GSM850/GSM900)
	Cable insertion loss: < 1.5dB (LTE B1/2/3/4/39 DCS1800/PCS1900)

5.3.2 Recommended RF Connector in Antenna Installation

If you choose to use RF connector to connect antenna, Hirose' UF.L-R-SMT connector is recommended.

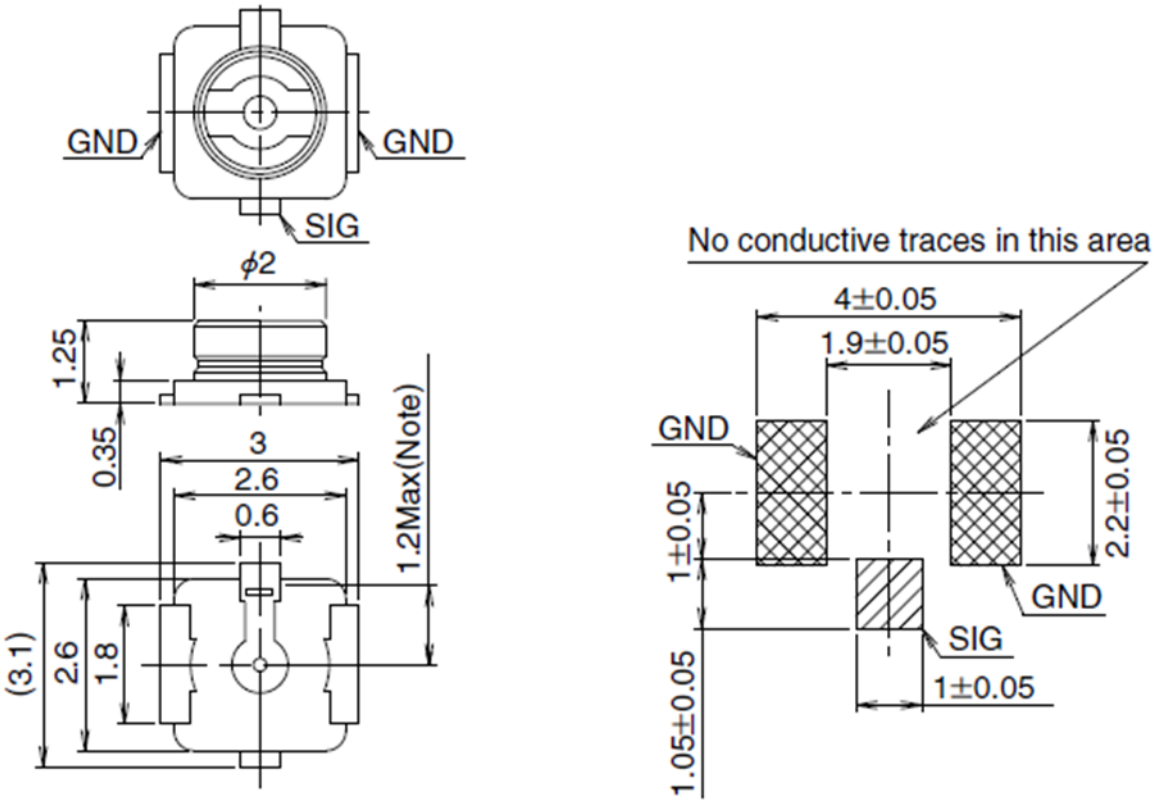

Figure 21 Connection Dimension of UF.L-R-SMT (unit: mm)

U.FL-LP series connecting line can be an alternative to UF.L-R-SMT.

	U.FL-LP-040HF	U.FL-LP-066HF U.FL-LP-068HF	U.FL-LP(V)-040HF(06)	U.FL-LP-062HF(06)	U.FL-LP-088HF(06)
Part No. Size	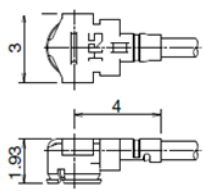	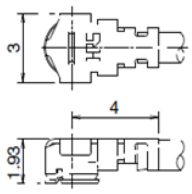	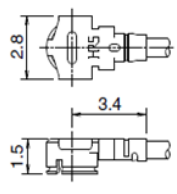	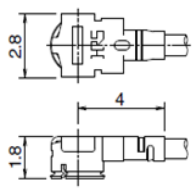	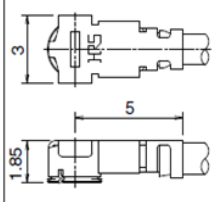
Mated Height	2.5mm Max. (2.4mm Nom.)	2.5mm Max. (2.4mm Nom.)	2.0mm Max. (1.9mm Nom.)	2.4mm Max. (2.3mm Nom.)	2.4mm Max. (2.3mm Nom.)
Applicable cable	Dia. 0.81mm	Dia. 1.13mm and Dia. 1.32mm	Dia. 0.81mm	Dia. 0.95mm	Dia. 1.37mm
Weight (mg)	54	59	35	45.5	72
Environmental compliant	Halogen-free, RoHS2 compliant				

Figure 22 UF.L-LP Series Connecting Line

The following figure shows the installation dimension of connection line and connector:

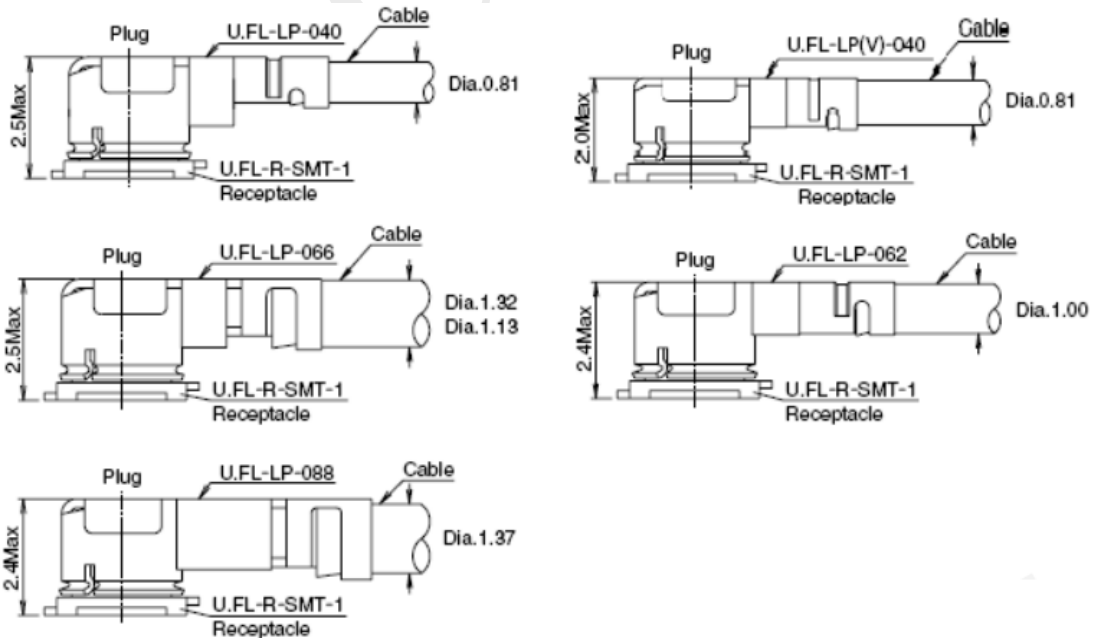

Figure 23 Installation Dimension (unit:mm)

Visit http://www.hirose.com for detail information.

6 Electrical Characteristics

6.1 Limit Voltage

Limit voltage range refers to the maximum voltage range of the module's power supply voltage as well as the digital and analog input/output interfaces. Operate beyond the range may cause damage to the product.

Limit voltage range of SLM156 are shown as below:

Table 23 Limit voltage range

Parameter	Min	Max	Unit
VBAT_BB	-0.3	4.7	V
VBAT_RF	-1.2	6	V
USB_VBUS	-0.3	5.5	V
Digital pin voltage	-0.3	2.3	V

6.2 Power Rated Parameter

Table 24 Power rated parameter of the module

Parameter	Description	Condition	Min	Typical	Max	Unit
VBAT	VBAT_BB VBAT_RF	The realistic input voltage must be in this range.	3.3	3.8	4.2	V
IVBAT	Peak current	Under LTE Cat.M1, the maximum transmission power is 23dBm 1RB		190	447	mA
USB_VBUS	USB detection		3.0	5.0	5.25	V

6.3 Working Temperature

It is recommended that you use SLM156 at -30℃~+75℃ and take temperature control measures when applications are in the harsh environment conditions. At the same time, a limited operating temperature range of the module should be provided. Under this temperature conditions, some of RF indicators may exceed. It is suggested that you store the applications under certain temperature conditions. Modules beyond this range may not work or are damaged.

Table 25 Temperature range

Parameter	Min	Typical	Max	Unit
Operating temperature	-30	+25	+75	℃
Limited operating temperature	-40~-35		75~+85	℃
Storage temperature	-45		+90	℃

6.4 Electrical Characteristics of Interface Operation Status

VL: logical low level

VH: logical high level

Table 26 Logical level of normal digital IO signal

Signal	VL		VH		Unit
	Min	Max	Min	Max	
Digital input	-0.3	0.3*Vpin_min	0.3*Vpin_max	Vpin_max	V
Digital output	GND	0.2	Vpin_min-0.2	Vpin	V

Note:

Vpin_min=1.45V, Vpin_max=2.0V (Vpin is high level digital interface, Vpin=1.8V)

Table 27 Electrical characteristics in power supply status

Parameter	I/O	Min	Typical	Max	Unit
VBAT	I	3.3	3.8	4.2	V
USIM_VDD	O	1.7	1.8	1.9	V

6.5 Module Power Consumption Range

Table 28 SLM156 current consumption

Parameter	Description	Condition	Typical	Unit
I_{VBAT}	Power off	Power off mode	8	uA
	Minimum functionality mode	AT+CFUN=0 (no connection between interface and USB)	0.8	mA
	Power saving mode(PSM)	PSM @LTE Cat.M1 network	10.4	uA
		PSM@LTE Cat.NB1 network	9.8	uA
	Idle mode	DRX=1.28s @LTE Cat.M1 network No connection between interface and USB)	1.99	mA
		e-I-DRX=20.48s @LTE Cat.NB1 network No connection between interface and USB)	2.77	mA
	LTE Cat.M1 data transmission (GNSS shut down)	23dBm (instrument test)	TBD	mA
		18dBm (instrument test)	TBD	mA
		12dBm (instrument test)	TBD	mA
		0dBm (instrument test)	TBD	mA
	LTE Cat.NB1 data transmission (GNSS shut down)	23dBm (instrument test)	TBD	mA
		18dBm (instrument test)	TBD	mA

		12dBm (instrument test)	TBD	mA
		0dBm (instrument test)	TBD	mA
	LTE Cat.M1 voice calling (GNSS shut down)	Voice calling @LTE Cat.M1 network	TBD	mA

6.6 Transmission Power

Table 29 SLM156 transmission power

Band	Max	Min
LTE-FDD B1/B2/B3/B4/B5/B8/B12/B13/B14/ B18/B19/B20 /B25/B26/B27/B28/B66/B71 /B85	20dBm±2.7dB	<-44dBm
GSM850/GSM900	33dBm±2dB	5dBm±5dB
DCS1800/PCS1900	30dBm±2dB	0dBm±5dB
GSM850/GSM900 (8-PSK)	27dBm±3dB	5dBm±5dB
DCS1800/PCS1900 (8-PSK)	26dBm±3dB	0dBm±5dB

6.7 Receiving Sensitivity

Table 30 SLM156 receiving sensitivity

Network type	band	Main	diversity	Cat.M1 sensitivity/ 3GPP (dBm)	Cat.NB1sensitivity/ 3GPP (dBm)
LTE	LTE-FDD B1	supportive	Non-supportive	<-100	<-102.8
	LTE-FDD B2	supportive		<-100	<-102.8
	LTE-FDD B3	supportive		<-100	<-102.8
	LTE-FDD B4	supportive		<-100	<-102.8
	LTE-FDD B5	supportive		<-100	<-102.8

	LTE-FDD B8	supportive		<-100	<-102.8
	LTE-FDD B12	supportive		<-100	<-102.8
	LTE-FDD B13	supportive		<-100	<-102.8
	LTE-FDD B14	supportive		<-100	<-102.8
	LTE-FDD B18	supportive		<-100	<-102.8
	LTE-FDD B19	supportive		<-100	<-102.8
	LTE-FDD B20	supportive		<-100	<-102.8
	LTE-FDD B25	supportive		<-100	<-102.8
	LTE-FDD B26	supportive		<-100	<-102.8
	LTE-FDD B27	supportive		<-100	<-102.8
	LTE-FDD B28	supportive		<-100	<-102.8
	LTE- B66	supportive		TBD	TBD
	LTE- B71	supportive		TBD	TBD
	LTE- B85	supportive		TBD	TBD
Network type	**band**	**main**	**diversity**	**GSM**	**sensitivity/3GPP (dBm)**
GSM	GSM850/GSM900	supportive	Non-supportive	<-102	
	DCS1800/PCS1900	supportive		<-102	

6.8 Environmental Reliability Requirements

Table 31 Environmental reliability requirements

Test items	Test condition
Low temperature storage test	temperature-45°C, last for 24h in shut down state
High temperature storage test	temperature+90°C, last for 24h in shut down state
Temperature shock test	In shut down mode, last for 1h under -45°C and +90°C, temperature conversion time <3min, carry on 24 cycle

High-temperature high-humidity test	temperature+85°C, humidity95%RH, last for 48h in shut down state
Low temperature operation test	temperature-30°C, last for 24h in operation state
High temperature operation test	temperature+75°C,last for 24h in operation state
Vibration test	Carry on vibration test following the requirements below: frequency: Random vibration ASD (acceleration spectral density) 5~20Hz: 0.96m2/s3 20~500Hz: 0.96m2/s3(20Hz), other -3dB/octave
Connector service life test	Board-to-board connector interface plugging 50 times; RF antenna interface cable plugging 30 times
ESD test	1 testing power PAD under calling state and large-sized ground, ESD meets: Contact discharge should pass ±4KV, ±5KV test level Air discharge should pass ±8KV, ±10KV test level 2 testing EVB's SIM card slot under shut-down mode, ESD meets: Contact discharge should pass ±4KV test level Air discharge should pass ±8KV test level 3、 other interfaces of the module, ESD meets: Contact discharge should pass ±1KV test level Air discharge should pass ±2KV test level

6.9 ESD Features

When the module is in application, static on human body or generated by friction among micro-electronic will pass to the module through various discharge means, and thus may cause some damage to the module. So high attention must be paid to ESD protection. Static protection measures should be taken in both the process of R&D and Production, such as adding ESD protection in circuit design and wearing anti-static gloves in the process of production and debugging.

Please refer to the following table for ESD-permitted discharge range.

Table 32 ESD performance parameter (temperature: 25°C, humidity: 45%)

Testing point	Contact discharge	Air discharge	Unit
VBAT,GND	±5	±10	KV
Other interface	±1	±2	KV

7 Mechanical Dimensions

7.1 Mechanical Dimensions of the Module

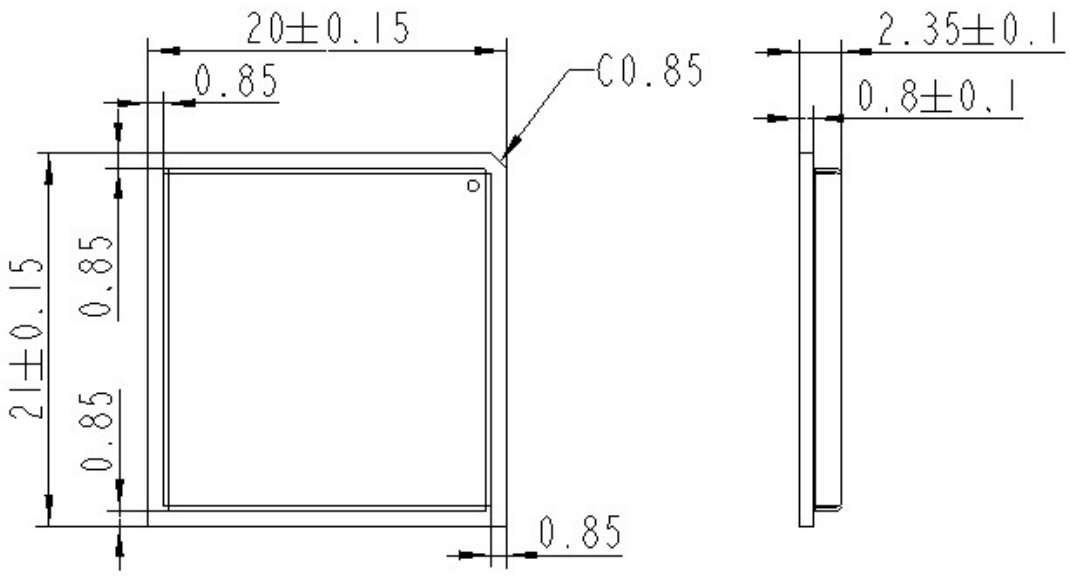

Figure 24 Dimension of the Module from Top View and Side View (unit: mm)

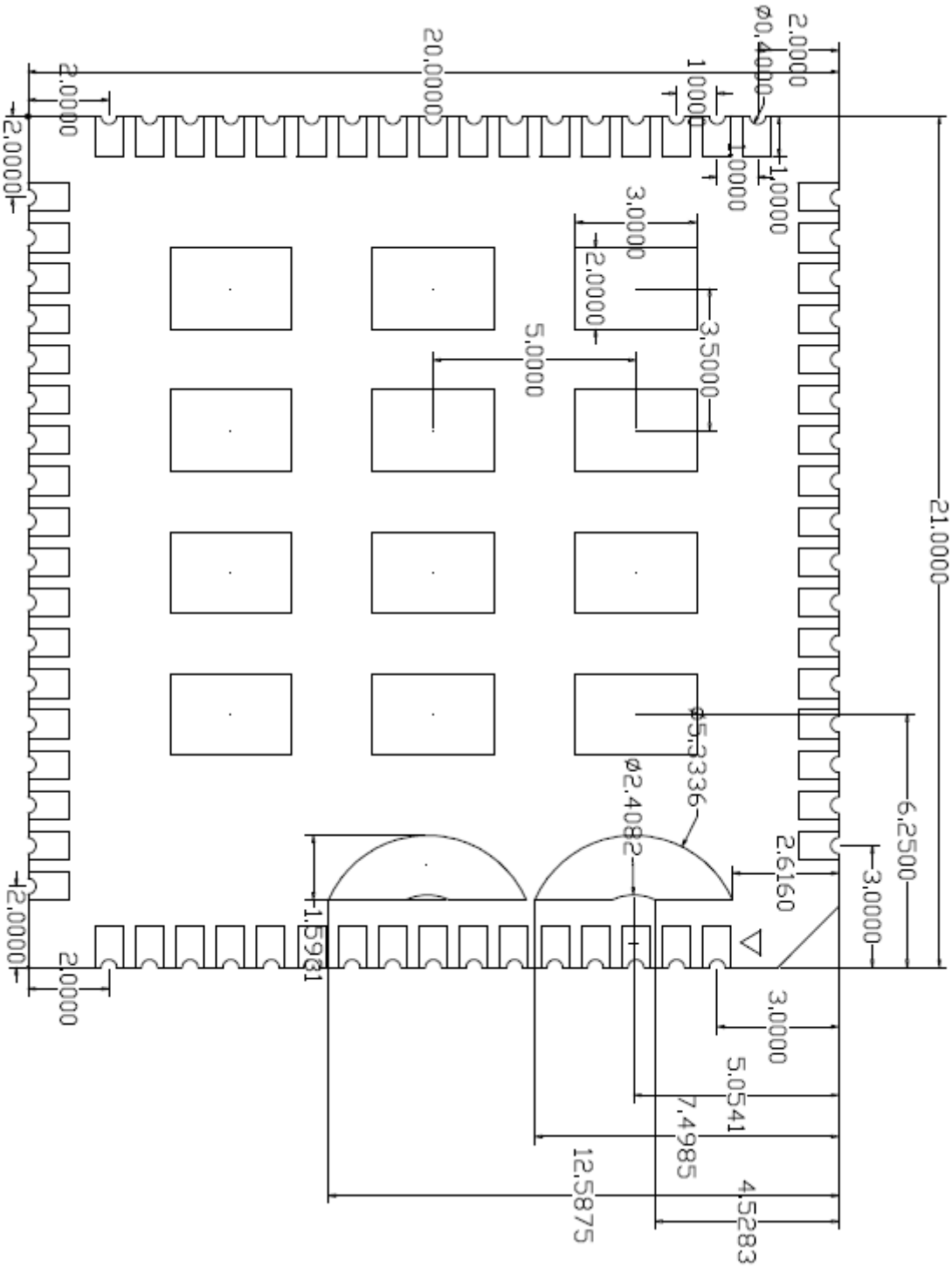

Figure 25 Dimension of the module from Bottom View (unit: mm)

7.2 Recommended Packaging

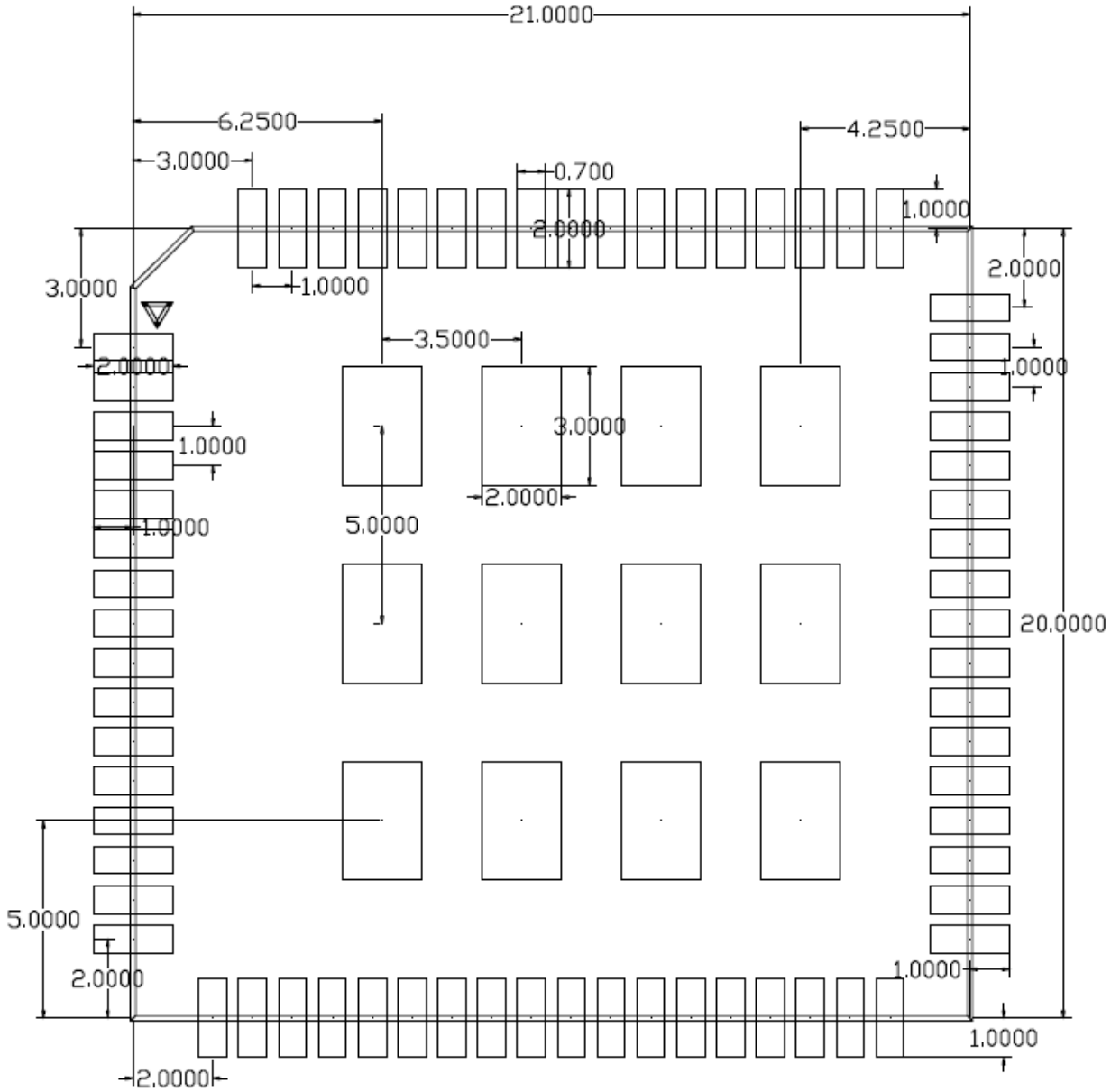

Figure 26 Recommended Packaging (unit: mm)

7.3 Top View of the Module

Figure 27 Top View of the Module

7.4 Bottom View of the Module

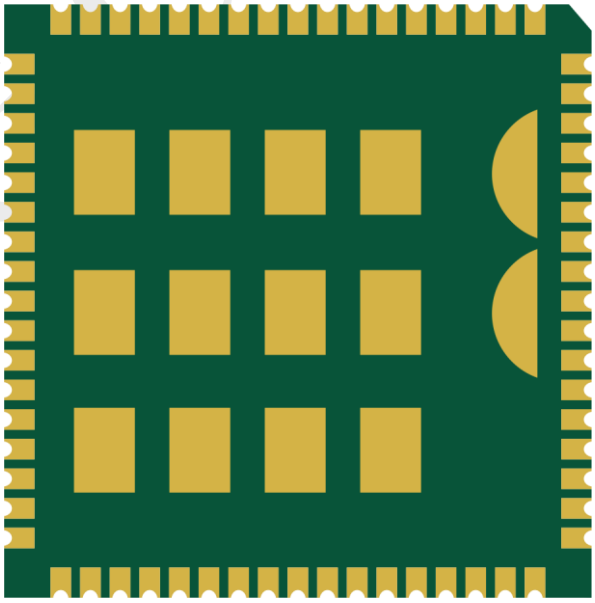

Figure 28 Bottom View of the Module

8 Storage and Manufacturing

8.1 Storage

SLM156 is stored in sealed vacuum bag. The restrictions of storage condition are shown as below:

1. Shelf life in sealed bag is 12 months at <40℃/90%RH.
2. After this bag is open, devices that will be subjected to reflow soldering or other high temperature processes must be:
   - Stored at <10%RH;
   - Mounted within 72 hours at factory conditions of ≤ 30℃/60%RH.
3. Devices require baking before mounting, if:
   - Humidity indicator card is >10% when ambient temperature is 23℃±5℃.
   - Mounting cannot be finished within 72 hours at factory conditions of ≤ 30℃/60% RH.
   - Stored at >10%RH.
4. If baking is required, devices may be baked for 48 hours at 125℃ ±5℃.

Note:

As plastic packaging cannot stand the high temperatures, the package must be removed from devices before baking.

8.2 Manufacturing and Welding

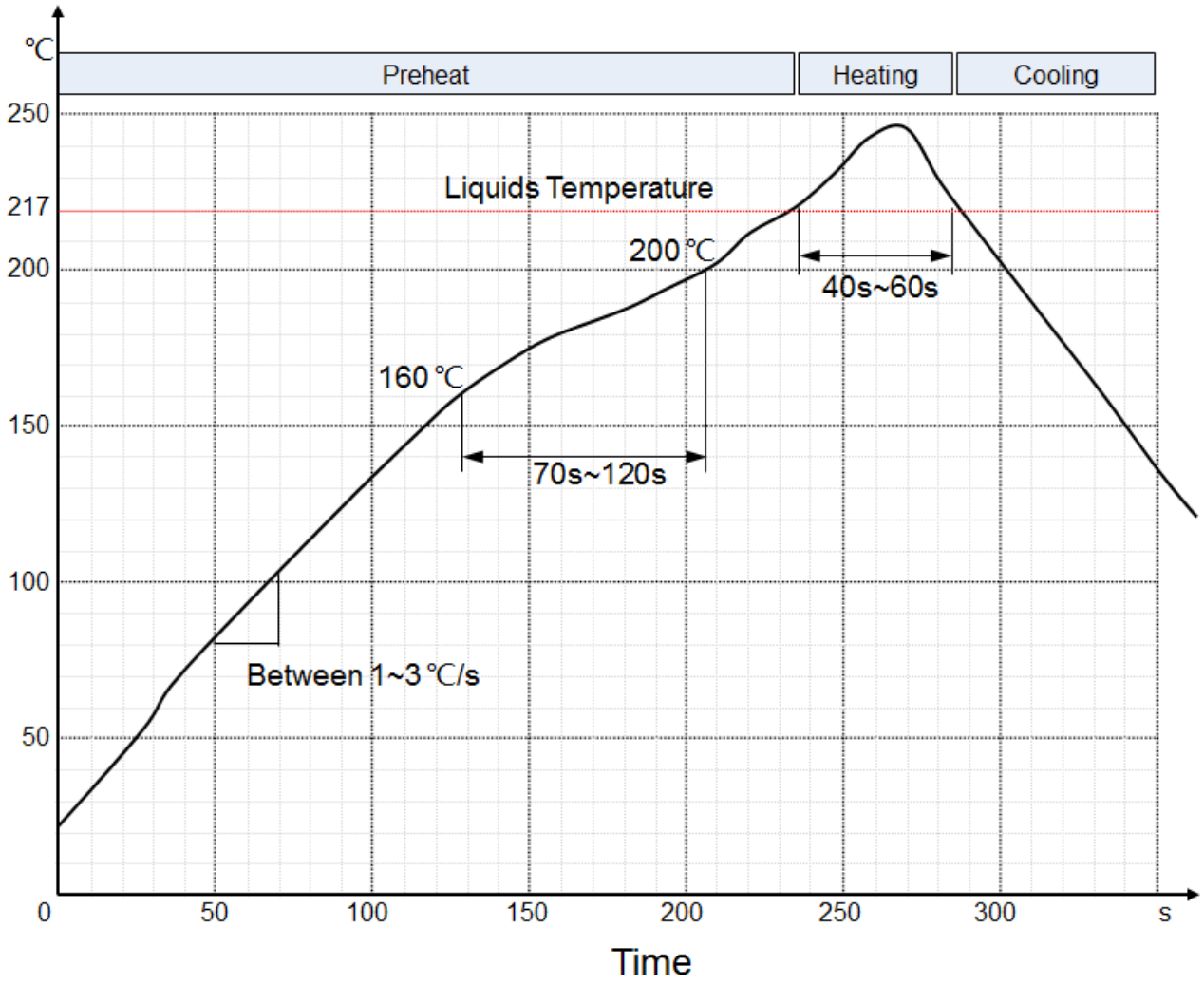

Figure 29 Reflow Soldering Temperature Profile

8.3 Packaging

SLM156 uses pallet packaging. Specifications are as follows:

Figure 30 Pallet Packaging (Unit: mm)

9 Appendix A References and Abbreviations

9.1 Reference

- SLM156 specifications;
- SLM156 AT command set;
- SLM156 EVB user manual;
- SLM156 reference design circuit;
- SLM156 application service process manual.

9.2 Terms and Abbreviations

Table 33 Terms and abbreviations

Abbreviation	Description
AMR	Adaptive Multi-rate
BER	Bit Error Rate
BTS	Base Transceiver Station
PCI	Peripheral Component Interconnect
CS	Circuit Switched (CS) domain
CSD	Circuit Switched Data
DCE	Data communication equipment
DTE	Data terminal equipment
DTR	Data Terminal Ready
EFR	Enhanced Full Rate
EMC	Electromagnetic Compatibility
ESD	Electrostatic Discharge

FR	Frame Relay
GMSK	Gaussian Minimum Shift Keying
GPIO	General Purpose Input Output
HR	Half Rate
HSDPA	High Speed Downlink Packet Access
HSUPA	High Speed Uplink Packet Access
HSPA	HSPA High-Speed Packet Access
HSPA+	HSPA High-Speed Packet Access+
IEC	International Electro-technical Commission
IMEI	International Mobile Equipment Identity
MEID	Mobile Equipment Identifier
I/O	Input/Output
ISO	International Standards Organization
ITU	International Telecommunications Union
bps	bits per second
LED	Light Emitting Diode
M2M	Machine to machine
MO	Mobile Originated
MT	Mobile Terminated
NTC	Negative Temperature Coefficient
PC	Personal Computer
PCB	Printed Circuit Board
PDU	Packet Data Unit
PPP	Point-to-point protocol
PS	Packet Switched

QPSK	Quadrate Phase Shift Keying
SIM	Subscriber Identity Module
TCP/IP	Transmission Control Protocol/ Internet Protocol
UART	Universal asynchronous receiver-transmitter
USIM	Universal Subscriber Identity Module
UMTS	Universal Mobile Telecommunications System
USB	Universal Serial Bus
WCDMA	Wideband Code Division Multiple Access
TD-SCDMA	Time Division-Synchronous Code Division Multiple Access
TD-LTE	Time Division Long Term Evolution
FDD LTE	Frequency Division Duplexing Long Term Evolution
Vmax	Maximum Voltage Value
Vnorm	Normal Voltage Value
Vmin	Minimum Voltage Value
VIHmax	Maximum Input High Level Voltage Value
VIHmin	Minimum Input High Level Voltage Value
VILmax	Maximum Input Low Level Voltage Value
VILmin	Minimum Input Low Level Voltage Value
VOHmax	Maximum Output High Level Voltage Value
VOHmin	Minimum Output High Level Voltage Value
VOLmax	Maximum Output Low Level Voltage Value
VOLmin	Minimum Output Low Level Voltage Value