RED bean | Data sheet

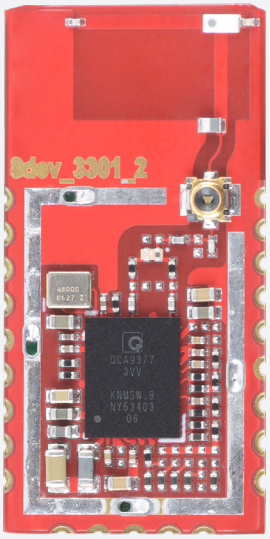

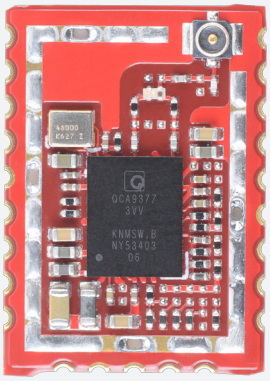

RED bean is a high performance and ultra low power surface mount SDIO radio combining single-stream 11ac Wave2 Wi-Fi and Bluetooth® 5.0 in a very small form factor

RED bean is IEEE 802.11b/g/n/a/ac Wave2 dual-band wireless LAN and Bluetooth 5.0 SDIO 3.0 module optimised for small size and low power consumption.

It is based on Qualcomm QCA9377-3 chipset. Has an integrated dual-band (2.4 and 5 GHz) 1x1 802.11ac Wave2 WiFi (supporting MU-MIMO) and Bluetooth® 5.0 transceivers and combined in to very small form factor (17 x 12 mm with RF connector and 24 x 12mm with integrated antenna).

The radio module supports advanced power saving techniques. Bluetooth supports both Class1 and Class2 transmissions and advanced coexistence mechanisms allow it to work seamlessly with Wi-Fi ensuring good quality and high performance.

RED bean software drivers are available for Linux, Windows 10 and Android operating systems.

Quick specs

- 802.11a/b/g/n/ac, 2.4 and 5 GHz, 1x1 SISO, 433 Mbps data rate, up to 20 dBm output power
- 20/40/80 MHz channel size support
- MU-MIMO
- Bluetooth v5.0, BLE, ANT+ and backwards compatibility with BT v1.x and BT v2.x + enhanced data rate
- Connectorized (Murata HSC type connector: MM4829-2702RB0) or an integrated dual-band antenna version
- Linux, Windows and Android drivers available
- Based on QCA9377-3 chipset
- Industrial temperature range -40 to +85 C°
- Very small form factor (17 by 12 mm without antenna or 24 by 12 mm with antenna)
- Surface mount, dual-side design
- Available interfaces - Bluetooth UART, WLAN SDIO 3.0

Block diagram

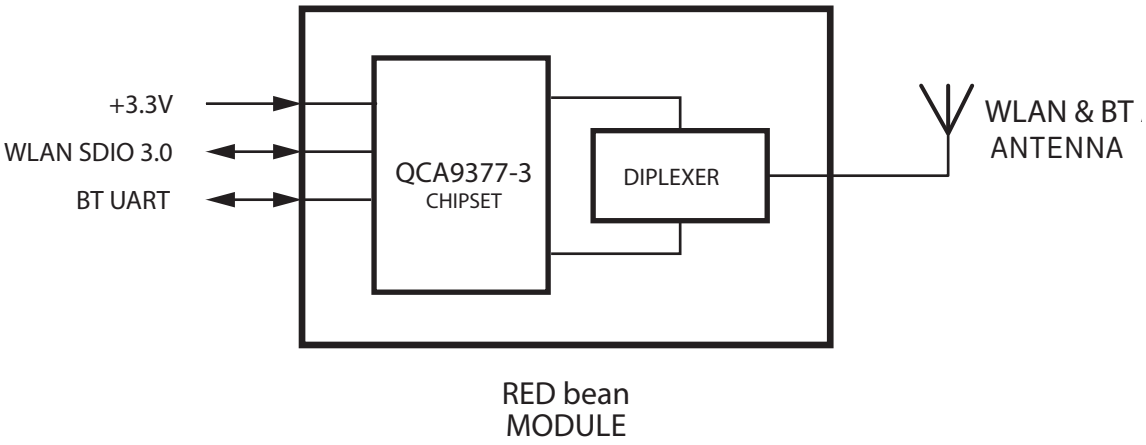

Module dimensions (with antenna/ without antenna)

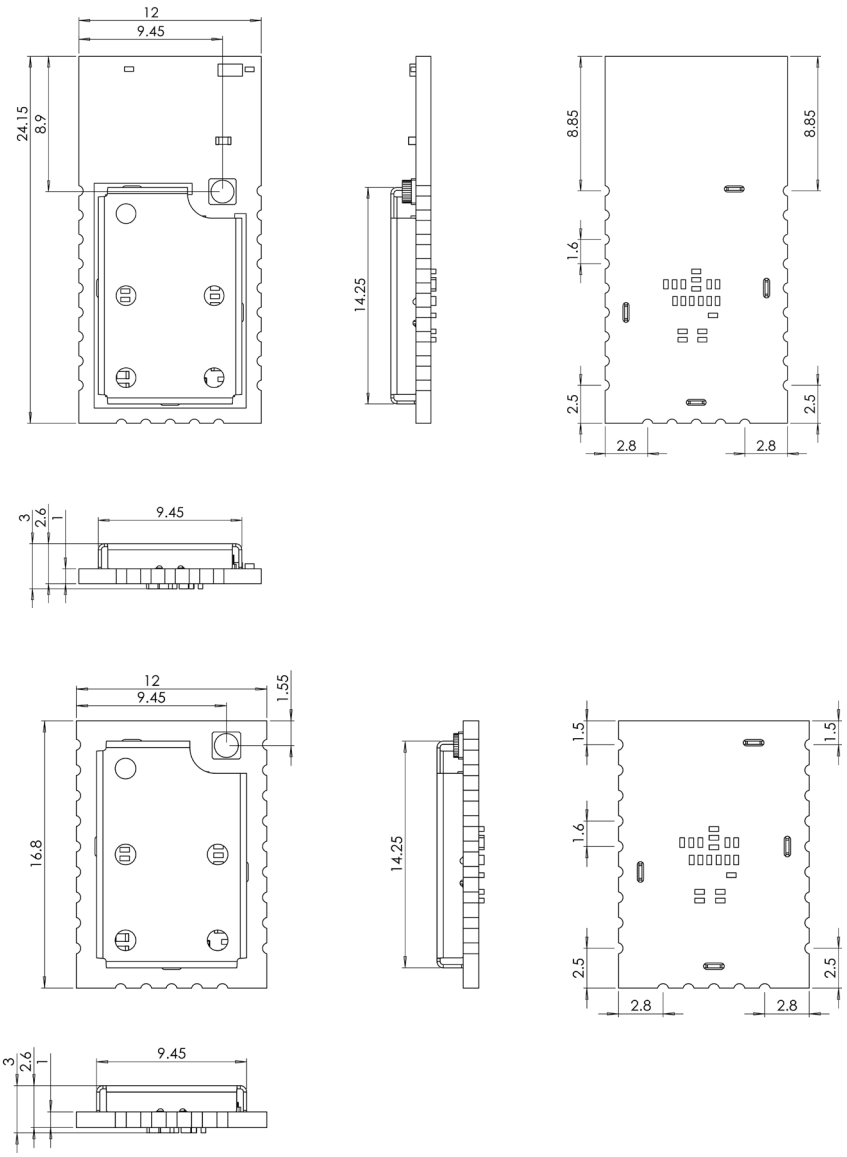

2.4 GHz 802.11AC (20 MHz)	Data rate (Mbps)	7.2	14.4	21.7	28.9	43.3	57.8	65	72.2	86.7
	Sensitivity (dBm)	-92	-89	-87	-83	-80	-76	-75	-73	-69
	Output power (dBm)	18	18	18	18	18	16	16	16	15

2.4 GHz 802.11AC (40 MHz)	Data rate (Mbps)	15	30	45	60	90	120	135	150	180	200
	Sensitivity (dBm)	-88	-86	-84	-81	-77	-73	-72	-70	-66	-64
	Output power (dBm)	17	17	17	17	17	15	15	15	13	13

5 GHz 802.11AC (20 MHz)	Data rate (Mbps)	7.2	14.4	21.7	28.9	43.3	57.8	65	72.2	86.7
	Sensitivity (dBm)	-91	-87	-85	-82	-78	-74	-73	-71	-67
	Output power (dBm)	15	15	15	14	14	12	11	10	10

5 GHz 802.11AC (40 MHz)	Data rate (Mbps)	15	30	45	60	90	120	135	150	180	200
	Sensitivity (dBm)	-87	-85	-82	-79	-76	-72	-70	-68	-65	-63
	Output power (dBm)	14	14	14	13	13	12	11	9	9	8

5 GHz 802.11AC (80 MHz)	Data rate (Mbps)	32.5	65	97.5	130	195	260	292.5	325	390	433.3
	Sensitivity (dBm)	-84	-81	-78	-76	-72	-68	-67	-65	-61	-59
	Output power (dBm)	13	13	13	12	12	11	11	9	9	8

Bluetooth	Frequency range	2.402 - 2.480 GHz
	Supported modes	BT and BLE
	Max TX power	14 dBm (4 dBm BLE)
	RX sensitivity (BER >= 0.1%)	-95 dBm (-99 dBm BLE)

Power consumption

Wi-Fi mode	mA
Standby (deep sleep)	0.16
2G tx99 11b 1Mbps	356
2G tx99 11n HT20 MCS7	326
5G tx99 11n HT20 MCS0	487
5G tx99 11n HT20 MCS7	422
5G tx99 11ac VHT80 MCS9	421

Bluetooth mode	mA
Continuous Rx burst	22
Continuous Tx Class 2 (+4 dBm)	38
Continuous Tx Class 2 (+12.5 dBm)	64
1.28 sec page scan (non-interlaced)	0.31
1.28 sec LE ADV	0.18
1.28 sec sniff as master	0.17
1.28 sec sniff as slave	0.22

Operating conditions

The module can operate in a wide temperature range and different conditions depending on the enclosure. The following guidelines guarantee that it will work correctly.

Parameter	Units	Min	Max
Working temperature	°C	-40	85
Storage temperature	°C	-40	90
Humidity	%RH	10	90
Storage humidity	%RH	5	90

Pinout Information
(with antenna/ without antenna)

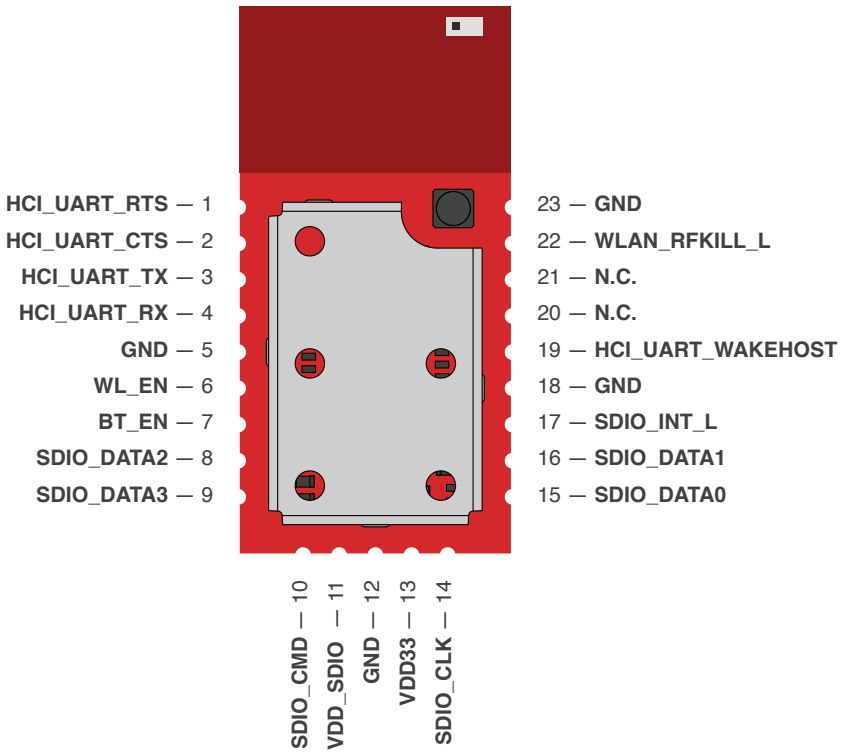

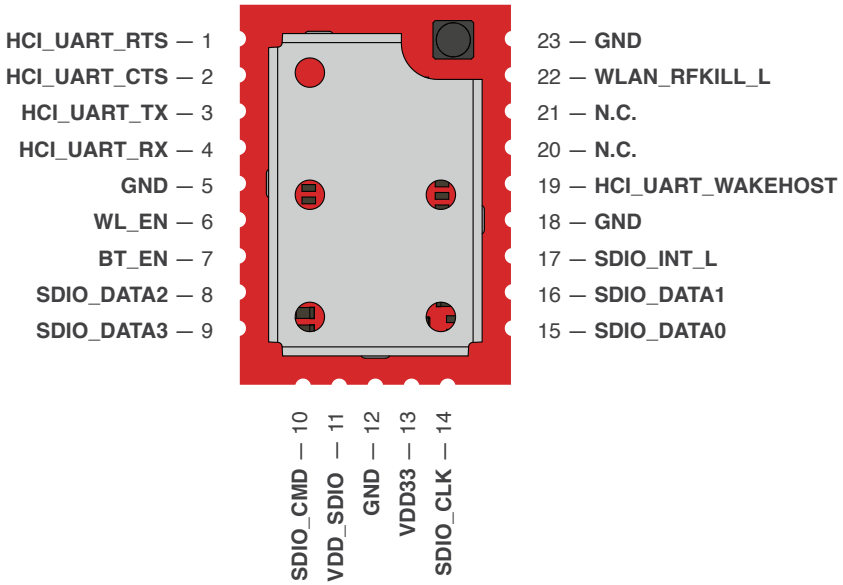

Pin	Name	I/O	Description
1	HCI_UART_RTS	DO	UART RTS signal
2	HCI_UART_CTS	DI	UART CTS signal
3	HCI_UART_TX	DO	UART TX signal
4	HCI_UART_RX	DI	UART RX signal
5	GND	-	Ground connection
6	WL_EN	PU	WLAN enable. Active high
7	BT_EN	PU	Bluetooth enable. Active high
8	SDIO_DATA2	B	SDIO data bus D2
9	SDIO_DATA3	B	SDIO data bus D3
10	SDIO_CMD	DI	SDIO CMD line signal
11	VDD_SDIO	PI	Voltage supply input 1.8V or 3.3V
12	GND	-	Ground connection
13	VDD33	PI	+3V3 digital power supply
14	SDIO_CLK	OD	SDIO clock signal
15	SDIO_DATA0	B	SDIO data bus D0
16	SDIO_DATA1	B	SDIO data bus D1
17	SDIO_INT_L	DO	SDIO interupt signal
18	GND	-	Ground connection
19	HCI_UART_WAKEHOST	OD	Bluetooth wakeup host. Active high
20	N.C.	-	Not connected
21	N.C.	-	Not connected
22	WLAN_RFKILL_L	PU	Turn off WLAN RF analog at front-end. Active low
23	GND	-	Ground connection

DO - Digital output signal

DI - Digital input CMOS

B - Bidirectional digital with CMOS input

PI - Power input

OD - A digital output signal with open drain

PU - Input signals with weak internal pull-up, to prevent signals from floating when left open

Power supply

Use pins 11, 13 for module powering. For SDIO3.0 mode use 1.8V, in SDIO2.0 mode module can be powered 1.8V or 3.3V.

Power ratings

Parameter	Units	Min	Nominal	Max
Supply voltage (VDD33)	V	3.135	3.3	3.465
Supply voltage (VDD_SDIO)	V	-	1.8 or 3.3	-

Software

Drivers for RED bean SDIO module (based on QCA9377-3) are available for Windows 7, Windows 10, Linux and Android operating systems.

PCB footprint (same for RED bean C and RED bean A modules)

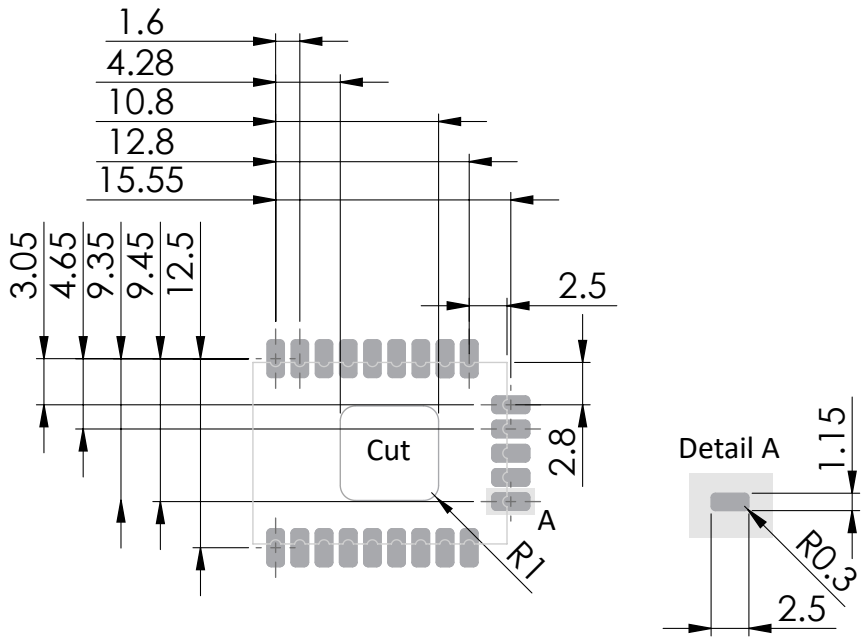

Soldering paste footprint (same for RED bean C and RED bean A modules)

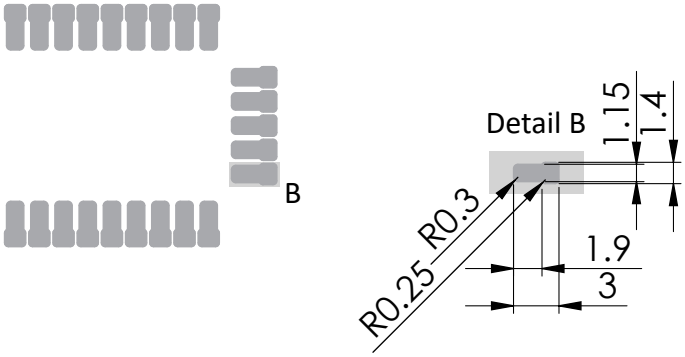

Development kit

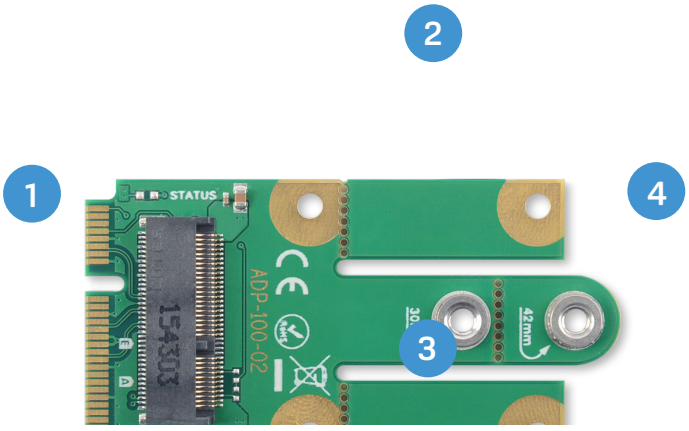

1 - SDIO interface (micro SD)

2, 3 - Module breakout for accessing HCI UART and other functionality

4 - RED bean module

Reflow profile recommendation

Ramp up rate	3°C/second max
Maximum time maintained above 217°C	120 seconds
Peak temperature	250°C
Maximum time within 5°C of peak temperature	20 seconds
Ramp down rate	6°C/second max

Reflow profile

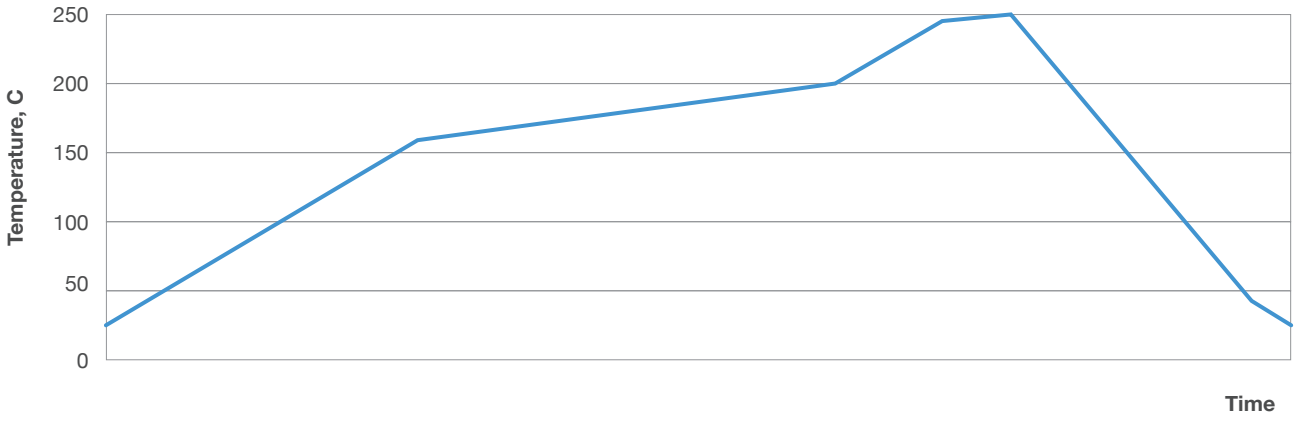

Ordering part number

RED-BEAN-C	RED bean with connector for external antenna
RED-BEAN-A	RED bean with an integrated dual-band ceramic omni-directional antenna
RED-BEAN-DVK	RED bean development kit. Comes with an integrated antenna module

Packaging

RED bean modules are packed into vacuum sealed trays. A tray of RED-BEAN-A fits 60 modules and a tray of RED-BEAN-C fits 78 modules. Every 5 trays are vacuum sealed packaging 300 of RED-BEAN-A modules or 390 of RED-BEAN-C modules.

RED-BEAN-A tray

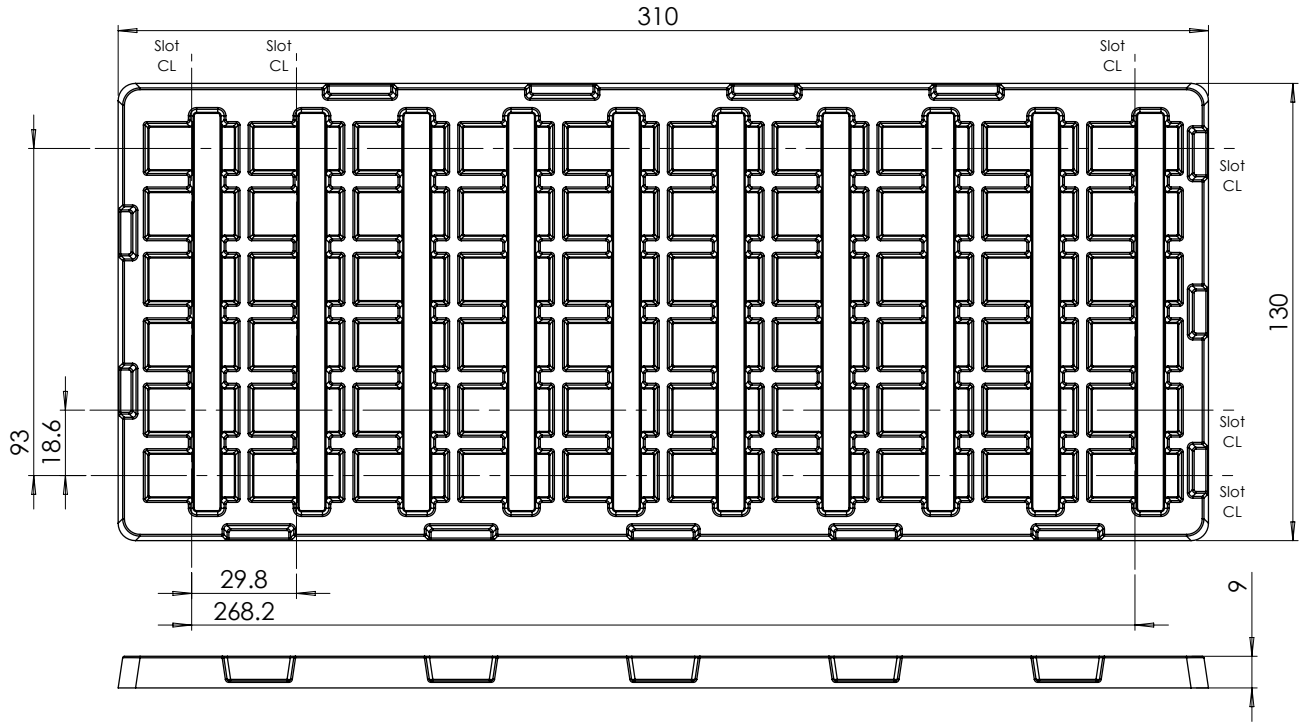
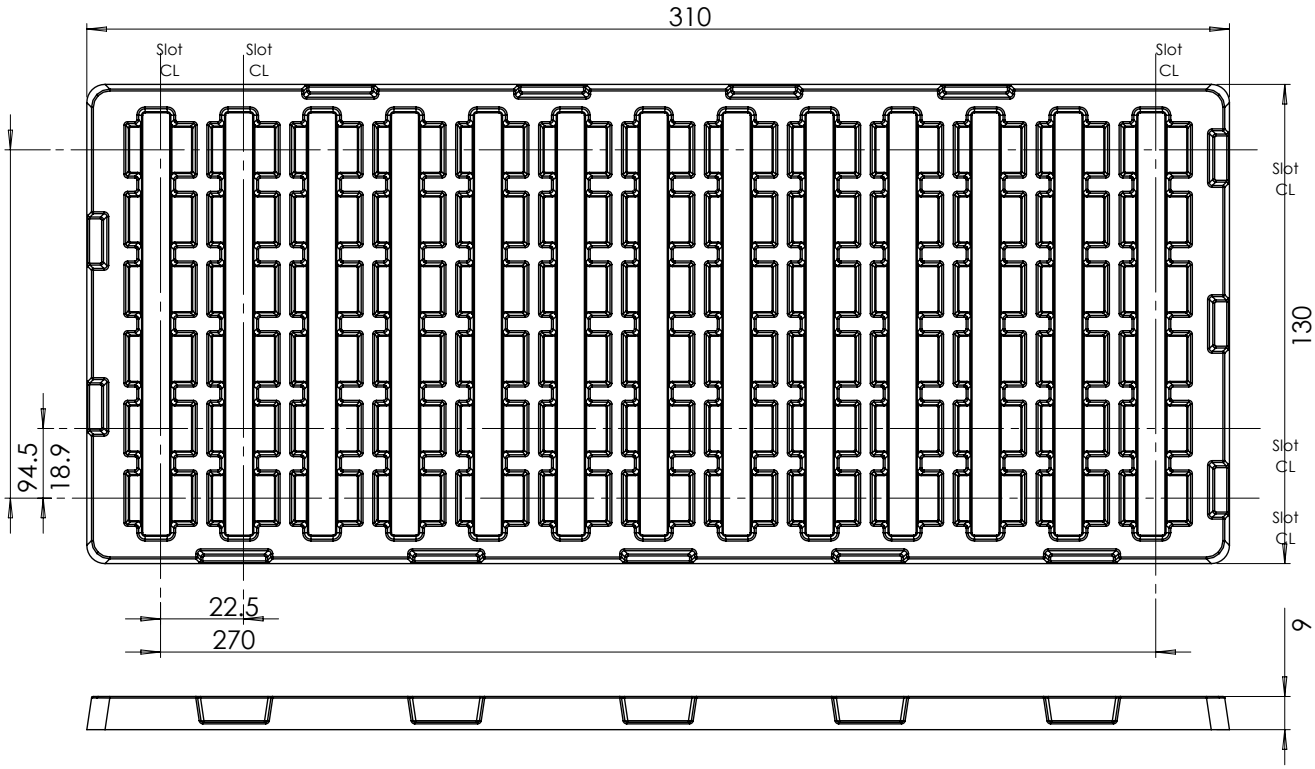
RED-BEAN-C tray